APPLICATION FOR BUILDING PERMIT

The Village of Irvington | 85 Main St | Irvington NY 10533

Application Number:	217	Date:	02/22/2021
Job Location:	5 STEARNS RDG	Parcel ID:	2.111-59-47.3
Property Owner:	Jeffrey Gluek	Property Class:	1 FAMILY RES
Occupancy:	One/ Two Family	Zoning:	
Common Name:			

Applicant	**Contractor**
Justine Cognato	Justine Cognato
Tesla Energy Operations	Tesla Energy Operations
1073 Route 94 Unit 4New Windsor NY 12553	1073 Route 94 Unit 4 New Windsor New York 12553
8453956040	8453956040

Description of Work

Type of Work:	Solar Panels	Applicant is:	Agent
Work Requested by:	The Owner	In association with:	
Cost of Work (Est.):	5020.00	Property Class:	1 FAMILY RES

Description of Work

Installation of a 4.08kW solar PV array consisting of 12 panels on the rooftop of the existing home.

Please Note: Completing the application does not constitute a permit to commence construction. To obtain your permit follow the instructions on the instruction page provided on page 3.

Job Location: 5 STEARNS RDG

Parcel Id: 2.111-59-47.3

AFFIDAVIT OF APPLICANT

I Justine Cognato being duly sworn, depose and says: That s/he does business as: Tesla Energy Operations with offices at: 1073 Route 94 Unit 4 New Windsor NY 12553 and that s/he is:

- ☐ The owner of the property described herein.
- ☐ The _____ of the New York Corporation _____ with offices at: _____ duly authorized by resolution of the Board of Directors, and that said corporation is duly authorized by the owner to make this application.
- ☐ A general partner of _____ with offices _____ and that said Partnership is duly authorized by the Owner to make this application.
- ☐ The Lessee of the premises, duly authorized by the owner to make this application.
- ☐ The Architect of Engineer duly authorized by the owner to make this application.
- ☑ The contractor authorized by the owner to make this application.

AMY M. CONN
NOTARY PUBLIC, STATE OF NEW YORK
Registration No. 01CO6327155
Qualified in Orange County
Commission Expires June 29, 20 23

That the information contained in this application and on the accompanying drawings is true to the best of his knowledge and belief. The undersigned hereby agrees to comply with all the requirements of the New York State Uniform Fire Prevention and Building Code, the Village of Irvington Building Code, Zoning Ordinance and all other laws pertaining to same, in the construction applied for, whether or not shown on plans or specify in this application.

Sworn to before me this 26 day of February of 2021

Amy M Conn

Notary Public / Commission of Deeds

Justine Cognato

Applicant's Signature

OWNER'S AUTHORIZATION

I Jeffrey ~~Oltzek~~ Gluck as the owner of the subject premises and have authorized the contractor named above to perform the work under the subject application.

Owner phone number 917-613-7037 Owner email address Jeff.gluck@gmail.com

☑ _____ I hereby acknowledge that it is my responsibility as the property owner to ensure that if the permit (if issued) receives a Final Certificate of Approval from the Building Department and further that if a Final Certificate of Approval is not obtained upon completion of the construction, a property violation may be placed on the property for which this permit is being requested.

Sworn to before me this 23rd day of Feb of 2021

Notary Public / Commission of Deeds

Applicant's Signature

RACHELLE I. SHAPIRO
Notary Public, State of New York
Reg. No. 02SH6324608
Qualified in Westchester County
Commission Expires May 11, 2023

January 23, 2021

RE: CERTIFICATION LETTER

Project/Job # 1054392
Project Address: Glueck Residence
5 Stearns Ridge
Irvington, NY 10533

AHJ Irvington Village
SC Office New Windsor

Design Criteria:

- Applicable Codes = 2020 RCNYS/BCNYS/EBCNYS with 2020 NYSUCS, ASCE 7-16, and 2018 NDS
- Risk Category = II
- Wind Speed = 120 mph (3-s Gust - Vult), Exposure Category C, Partially/Fully Enclosed Method
- Ground Snow Load = 35 psf
- MP2: 2x8 Stick Frame @ 16" OC, Comp Roof, Roof DL = 10.5 psf, Roof LL/SL = 22.4 psf (Non-PV), Roof LL/SL = 12.2 psf (PV)
- MP4: 2x8 Stick Frame @ 16" OC, Comp Roof, Roof DL = 10.5 psf, Roof LL/SL = 22.4 psf (Non-PV), Roof LL/SL = 12.2 psf (PV)

Note: Per IBC 1613.1; Seismic check is not required because Ss = 0.295 < 0.4g and Seismic Design Category (SDC) = B < D

To Whom It May Concern,

A jobsite survey of the existing framing system of the address indicated above was performed by a site survey team from Tesla. Structural evaluation was based on site observations and the design criteria listed above.

Based on this evaluation, I certify that the alteration to the existing structure by installation of the PV system meets the prescriptive compliance requirements of the applicable existing building and/or new building provisions adopted/referenced above.

Additionally, I certify that the PV module assembly including all standoffs supporting it have been reviewed to be in accordance with the manufacturer's specifications and to meet and/or exceed all requirements set forth by the referenced codes for loading.

The PV assembly hardware specifications are contained in the plans/docs submitted for approval.

Tesla, Inc.
3055 Clearview Way, San Mateo, CA 94402
p 650 638 1028 f 650 638 1029

HARDWARE DESIGN AND STRUCTURAL ANALYSIS RESULTS SUMMARY TABLES

Landscape Hardware	Hardware - Landscape Modules' Standoff Specifications					
	X-X Spacing	X-X Cantilever	Y-Y Spacing	Y-Y Cantilever	Configuration	Uplift DCR
MP2	64"	24"	41"	NA	Staggered	55.7%
MP4	64"	24"	41"	NA	Staggered	55.7%

Portrait Hardware	Hardware - Portrait Modules' Standoff Specifications					
	X-X Spacing	X-X Cantilever	Y-Y Spacing	Y-Y Cantilever	Configuration	Uplift DCR
MP2	64"	20"	69"	NA	Staggered	94.1%
MP4	64"	20"	69"	NA	Staggered	94.1%

Mounting Plane	Structure Information			Qualification Results
	Type	Pitch	Spacing	Member Evaluation Results
MP2	Stick Frame	40°	16" O.C.	Member Impact Check OK
MP4	Stick Frame	40°	16" O.C.	Member Impact Check OK

Tesla, Inc.
3055 Clearview Way, San Mateo, CA 94402
p 650 638 1028 f 650 638 1029

STRUCTURE ANALYSIS - LOADING SUMMARY AND MEMBER CHECK - MP2

Member Properties Summary					
MP2		Horizontal Member Spans		Rafter Properties	
		Overhang	1.20 ft	Actual W	1.50"
Roof System Properties		Span 1	12.41 ft	Actual D	7.25"
Number of Spans (w/o Overhang)	1	Span 2		Nominal	Yes
Roofing Material	Comp Roof	Span 3		A (in^2)	10.88
Re-Roof	No	Span 4		Sx (in.^3)	13.14
Plywood Sheathing	Yes	Span 5		Ix (in^4)	47.63
Board Sheathing	None	Total Rake Span	17.76 ft	TL Defl'n Limit	120
Vaulted Ceiling	No	PV 1 Start	1.75 ft	Wood Species	SPF
Ceiling Finish	1/2" Gypsum Board	PV 1 End	12.33 ft	Wood Grade	#2
Rafter Slope	40°	PV 2 Start		Fb (psi)	875
Rafter Spacing	16" O.C.	PV 2 End		Fv (psi)	135
Top Lat Bracing	Full	PV 3 Start		E (psi)	1,400,000
Bot Lat Bracing	At Supports	PV 3 End		E-min (psi)	510,000

Member Loading Summary					
Roof Pitch	10/12	Initial	Pitch Adjust	Non-PV Areas	PV Areas
Roof Dead Load	DL	10.5 psf	x 1.31	13.7 psf	13.7 psf
PV Dead Load	PV-DL	3.0 psf	x 1.31		3.9 psf
Roof Live Load	RLL	20.0 psf	x 0.70	14.0 psf	
Snow Load	SL[1,2]	35.0 psf	x 0.64 l x 0.35	22.4 psf	12.2 psf
Total Load (Governing LC)	TL			36.1 psf	29.8 psf

Notes: 1. ps = Cs*pf; Cs -roof, Cs -pv per ASCE 7 [Figure 7.4-1]; 2. pf = 0.7 (Ce) (Ct) (Is) pg ; Ce=0.9, Ct=1.1, Is=1.0;

Member Analysis Results Summary					
Governing Analysis	Pre-PV	Load (psf)	Post-PV	Net Impact	Result
Gravity Loading Check	36.1		29.8	-17%	Pass

LOAD ITEMIZATION - MP2

Net PV System Load		
PV Module Weight		2.5 psf
Hardware Assembly Weight (psf)		0.5 psf
Net PV System Weight		**3.0 psf**

Roof Dead Load	Non-PV Areas	Material	PV Areas
Roof Category Description		MP2	
Original/Existing Roofing Material	5.0 psf	Comp Roof (2 Layers)	5.0 psf
Re-Roof (Under PV Assembly)		No	
Underlayment	0.5 psf	Roofing Paper	0.5 psf
Plywood Sheathing	1.5 psf	Yes	1.5 psf
Board Sheathing		None	
Rafter Size and Spacing	2.3 psf	2 x 8 @ 16 in. O.C.	2.3 psf
Vaulted Ceiling		No	
Miscellaneous	1.2 psf	Miscellaneous Items	1.2 psf
Total Roof Dead Load	**10.5 psf**	**(MP2)**	**10.5 psf**

Reduced Roof LL	Non-PV Areas	Value	ASCE 7-16
Roof Live Load	L_o	20.0 psf	Table 4.3-1
Member Tributary Area	A_t	$\leq$ 200 sf	
Roof Slope		10/12	
Tributary Area Reduction	R_1	1	Section 4.8
Sloped Roof Reduction	R_2	0.7	Section 4.8
Reduced Roof Live Load	Lr	$L_r = L_o (R_1) (R_2)$	Equation 4.8-1
Reduced Roof Live Load	**Lr**	**14 psf (MP2)**	**14.0 psf**

Reduced Ground/Roof Live/Snow Loads			Code
Ground Snow Load	p_g	35.0 psf	Table 7-1
Snow Load Reductions Allowed?		Yes	
Snow Guards to be Installed?		No	
Effective Roof Slope		40°	
Horiz. Distance from Eve to Ridge	W	13.6 ft	
Snow Importance Factor	I_s	1.0	Table 1.5-2
Snow Exposure Factor	C_e	Fully Exposed 0.9	Table 7-2
Snow Thermal Factor	C_t	Structures kept just above freezing 1.1	Table 7-3
Minimum Flat Roof Snow Load (w/ Rain-on-Snow Surcharge)	$p_{f\text{-}min}$	24.3 psf	7.3.4 & 7.10
Flat Roof Snow Load	p_f	$p_f = 0.7 (C_e) (C_t) (I) pg$; $p_f \geq$ pf-min 24.3 psf	Eq: 7.3-1 **69%**

ASCE Design Sloped Roof Snow Load Over Surrounding Roof			
Surface Condition of Surrounding Roof	$C_{s\text{-}roof}$	All Other Surfaces 0.9	Figure 7-2
Design Roof Snow Load Over Surrounding Roof	$p_{s\text{-}roof}$	$p_{s\text{-}roof} = (C_{s\text{-}roof})\ p_f$ **22.4 psf**	**ASCE Eq: 7.4-1** **64%**

ASCE Design Sloped Roof Snow Load Over PV Modules			
Surface Condition of PV Modules	$C_{s\text{-}pv}$	Unobstructed Slippery Surfaces 0.5	Figure 7-2
Design Snow Load Over PV Modules	$p_{s\text{-}pv}$	$p_{s\text{-}pv} = (C_{s\text{-}pv})\ p_f$ **12.2 psf**	**ASCE Eq: 7.4-1** **35%**

ZEP HARDWARE DESIGN CALCULATIONS - MP2

Mounting Plane Information			
Roofing Material		Comp Roof	
Roof Slope		40°	
Framing Type / Direction		Y-Y Rafters	
PV System Type		SolarCity SleekMount™	
Zep System Type		ZS Comp	
Standoff (Attachment Hardware)		ZS Comp V4 with Flashing Insert	
Spanning Vents		No	

Wind Design Criteria			
Design Code	IBC 2018	ASCE 7-16	
Wind Design Method		Partially/Fully Enclosed Method	
Ultimate Wind Speed	V-Ult	120 mph	Fig. 26.5-1B
Exposure Category		C	Section 26.7
Roof Style		Hip Roof	Fig. 30.3-2A/B/C/D/E/G/H-5A/B
Mean Roof Height	h	25 ft	Section 26.2

Notes: 1. Risk Category = II

Wind Pressure Calculation Coefficients			
Wind Pressure Exposure	K_z	0.95	Table 26.10-1
Topographic Factor	K_{zt}	1.00	Section 26.8
Wind Directionality Factor	K_d	0.85	Section 26.6-1
Ground Elevation Factor	Ke	1.00	Table 26.9-1
Velocity Pressure	**q_h**	**qh = 0.00256 (Kz) (Kzt) (Kd) (Ke) (V^2) 29.6 psf**	**Equation 26.10-1**

		Wind Pressure	
Ext. Pressure Coefficient (Up)	GCp (Up)	-1.25	Fig. 30.3-2A/B/C/D/E/G/H-5A/B
Ext. Pressure Coefficient (Down)	GCp (Down)	0.58	Fig. 30.3-2A/B/C/D/E/G/H-5A/B
Design Wind Pressure	p	p = qh (yE) (ya) (GCp); yE = 1.2, yA = 0.6	Equation 29.4-7
Wind Pressure Up (Design | Ult)	**$p_{(up)}$**	**-15.5 | -25.8 psf**	
Wind Pressure Down (Design | Ult)	**$p_{(down)}$**	**9.6 | 16 psf**	

Notes: 1. yA = solar panel pressure equalization factor per SEAOC PV2-2016 [Figure 29.4-8]

ALLOWABLE STANDOFF SPACINGS

Wind Zone Perimeter Width (a) = 8.7 ft.

		X-Direction	Y-Direction
Max Allowable Standoff Spacing	Landscape	64"	41"
Max Allowable Cantilever	Landscape	24"	NA
Standoff Configuration	Landscape	Staggered	
Max Standoff Tributary Area (Interior)	Trib	18 sf	
PV Assembly Dead Load	W-PV	3.0 psf	
Net Wind Uplift at Standoff (Interior)	T-actual	-254 lbs	
Uplift Capacity of Standoff	T-allow	456 lbs	
Standoff Demand/Capacity (Interior)	DCR	55.7%	

		X-Direction	Y-Direction
Max Allowable Standoff Spacing	Portrait	64"	69"
Max Allowable Cantilever	Portrait	20"	NA
Standoff Configuration	Portrait	Staggered	
Max Standoff Tributary Area (Interior)	Trib	30 sf	
PV Assembly Dead Load	W-PV	3.0 psf	
Net Wind Uplift at Standoff (Interior)	T-actual	-429 lbs	
Uplift Capacity of Standoff	T-allow	456 lbs	
Standoff Demand/Capacity (Interior)	DCR	94.1%	

STRUCTURE ANALYSIS - LOADING SUMMARY AND MEMBER CHECK - MP4

Member Properties Summary					
MP4		Horizontal Member Spans		Rafter Properties	
		Overhang	1.20 ft	Actual W	1.50"
Roof System Properties		Span 1	10.69 ft	Actual D	7.25"
Number of Spans (w/o Overhang)	1	Span 2		Nominal	Yes
Roofing Material	Comp Roof	Span 3		A (in^2)	10.88
Re-Roof	No	Span 4		Sx (in.^3)	13.14
Plywood Sheathing	Yes	Span 5		Ix (in^4)	47.63
Board Sheathing	None	Total Rake Span	15.52 ft	TL Defl'n Limit	120
Vaulted Ceiling	No	PV 1 Start	3.17 ft	Wood Species	SPF
Ceiling Finish	1/2" Gypsum Board	PV 1 End	8.58 ft	Wood Grade	#2
Rafter Slope	40°	PV 2 Start		Fb (psi)	875
Rafter Spacing	16" O.C.	PV 2 End		Fv (psi)	135
Top Lat Bracing	Full	PV 3 Start		E (psi)	1,400,000
Bot Lat Bracing	At Supports	PV 3 End		E-min (psi)	510,000

Member Loading Summary					
Roof Pitch	10/12	Initial	Pitch Adjust	Non-PV Areas	PV Areas
Roof Dead Load	DL	10.5 psf	x 1.31	13.7 psf	13.7 psf
PV Dead Load	PV-DL	3.0 psf	x 1.31		3.9 psf
Roof Live Load	RLL	20.0 psf	x 0.70	14.0 psf	
Snow Load	SL[1,2]	35.0 psf	x 0.64 l x 0.35	22.4 psf	12.2 psf
Total Load (Governing LC)	TL			36.1 psf	29.8 psf

Notes: 1. ps = Cs*pf; Cs -roof, Cs -pv per ASCE 7 [Figure 7.4-1]; 2. pf = 0.7 (Ce) (Ct) (Is) pg ; Ce=0.9, Ct=1.1, Is=1.0;

Member Analysis Results Summary					
Governing Analysis	Pre-PV	Load (psf)	Post-PV	Net Impact	Result
Gravity Loading Check	36.1		29.8	-17%	Pass

LOAD ITEMIZATION - MP4

Net PV System Load		
PV Module Weight		2.5 psf
Hardware Assembly Weight (psf)		0.5 psf
Net PV System Weight		**3.0 psf**

Roof Dead Load	Non-PV Areas	Material	PV Areas
Roof Category Description		MP4	
Original/Existing Roofing Material	5.0 psf	Comp Roof (2 Layers)	5.0 psf
Re-Roof (Under PV Assembly)		No	
Underlayment	0.5 psf	Roofing Paper	0.5 psf
Plywood Sheathing	1.5 psf	Yes	1.5 psf
Board Sheathing		None	
Rafter Size and Spacing	2.3 psf	2 x 8 @ 16 in. O.C.	2.3 psf
Vaulted Ceiling		No	
Miscellaneous	1.2 psf	Miscellaneous Items	1.2 psf
Total Roof Dead Load	**10.5 psf**	**(MP4)**	**10.5 psf**

Reduced Roof LL	Non-PV Areas	Value	ASCE 7-16
Roof Live Load	L_o	20.0 psf	Table 4.3-1
Member Tributary Area	A_t	$\leq$ 200 sf	
Roof Slope		10/12	
Tributary Area Reduction	R_1	1	Section 4.8
Sloped Roof Reduction	R_2	0.7	Section 4.8
Reduced Roof Live Load	Lr	$L_r = L_o (R_1) (R_2)$	Equation 4.8-1
Reduced Roof Live Load	**Lr**	**14 psf (MP4)**	**14.0 psf**

Reduced Ground/Roof Live/Snow Loads			Code
Ground Snow Load	p_g	35.0 psf	Table 7-1
Snow Load Reductions Allowed?		Yes	
Snow Guards to be Installed?		No	
Effective Roof Slope		40°	
Horiz. Distance from Eve to Ridge	W	11.9 ft	
Snow Importance Factor	I_s	1.0	Table 1.5-2
Snow Exposure Factor	C_e	Fully Exposed 0.9	Table 7-2
Snow Thermal Factor	C_t	Structures kept just above freezing 1.1	Table 7-3
Minimum Flat Roof Snow Load (w/ Rain-on-Snow Surcharge)	$p_{f\text{-}min}$	24.3 psf	7.3.4 & 7.10
Flat Roof Snow Load	p_f	$p_f = 0.7 (C_e) (C_t) (I) pg$; $p_f \geq$ pf-min 24.3 psf	Eq: 7.3-1 **69%**

ASCE Design Sloped Roof Snow Load Over Surrounding Roof			
Surface Condition of Surrounding Roof	$C_{s\text{-}roof}$	All Other Surfaces 0.9	Figure 7-2
Design Roof Snow Load Over Surrounding Roof	$p_{s\text{-}roof}$	$p_{s\text{-}roof} = (C_{s\text{-}roof})\ p_f$ **22.4 psf**	**ASCE Eq: 7.4-1** **64%**

ASCE Design Sloped Roof Snow Load Over PV Modules			
Surface Condition of PV Modules	$C_{s\text{-}pv}$	Unobstructed Slippery Surfaces 0.5	Figure 7-2
Design Snow Load Over PV Modules	$p_{s\text{-}pv}$	$p_{s\text{-}pv} = (C_{s\text{-}pv})\ p_f$ **12.2 psf**	**ASCE Eq: 7.4-1** **35%**

ZEP HARDWARE DESIGN CALCULATIONS - MP4

Mounting Plane Information			
Roofing Material		Comp Roof	
Roof Slope		40°	
Framing Type / Direction		Y-Y Rafters	
PV System Type		SolarCity SleekMount™	
Zep System Type		ZS Comp	
Standoff (Attachment Hardware)		ZS Comp V4 with Flashing Insert	
Spanning Vents		No	

Wind Design Criteria			
Design Code	IBC 2018	ASCE 7-16	
Wind Design Method		Partially/Fully Enclosed Method	
Ultimate Wind Speed	V-Ult	120 mph	Fig. 26.5-1B
Exposure Category		C	Section 26.7
Roof Style		Hip Roof	Fig. 30.3-2A/B/C/D/E/G/H-5A/B
Mean Roof Height	h	25 ft	Section 26.2

Notes: 1. Risk Category = II

Wind Pressure Calculation Coefficients			
Wind Pressure Exposure	K_z	0.95	Table 26.10-1
Topographic Factor	K_{zt}	1.00	Section 26.8
Wind Directionality Factor	K_d	0.85	Section 26.6-1
Ground Elevation Factor	Ke	1.00	Table 26.9-1
Velocity Pressure	q_h	**qh = 0.00256 (Kz) (Kzt) (Kd) (Ke) (V^2) 29.6 psf**	**Equation 26.10-1**

		Wind Pressure	
Ext. Pressure Coefficient (Up)	GCp (Up)	-1.25	Fig. 30.3-2A/B/C/D/E/G/H-5A/B
Ext. Pressure Coefficient (Down)	GCp (Down)	0.58	Fig. 30.3-2A/B/C/D/E/G/H-5A/B
Design Wind Pressure	p	p = qh (yE) (ya) (GCp); yE = 1.2, yA = 0.6	Equation 29.4-7
Wind Pressure Up (Design | Ult)	$p_{(up)}$	**-15.5 | -25.8 psf**	
Wind Pressure Down (Design | Ult)	$p_{(down)}$	**9.6 | 16 psf**	

Notes: 1. yA = solar panel pressure equalization factor per SEAOC PV2-2016 [Figure 29.4-8]

ALLOWABLE STANDOFF SPACINGS

Wind Zone Perimeter Width (a) = 8.7 ft.

		X-Direction	Y-Direction
Max Allowable Standoff Spacing	Landscape	64"	41"
Max Allowable Cantilever	Landscape	24"	NA
Standoff Configuration	Landscape	Staggered	
Max Standoff Tributary Area (Interior)	Trib	18 sf	
PV Assembly Dead Load	W-PV	3.0 psf	
Net Wind Uplift at Standoff (Interior)	T-actual	-254 lbs	
Uplift Capacity of Standoff	T-allow	456 lbs	
Standoff Demand/Capacity (Interior)	DCR	55.7%	

		X-Direction	Y-Direction
Max Allowable Standoff Spacing	Portrait	64"	69"
Max Allowable Cantilever	Portrait	20"	NA
Standoff Configuration	Portrait	Staggered	
Max Standoff Tributary Area (Interior)	Trib	30 sf	
PV Assembly Dead Load	W-PV	3.0 psf	
Net Wind Uplift at Standoff (Interior)	T-actual	-429 lbs	
Uplift Capacity of Standoff	T-allow	456 lbs	
Standoff Demand/Capacity (Interior)	DCR	94.1%	

VILLAGE OF IRVINGTON
BUILDING DEPARTMENT
85 MAIN STREET
IRVINGTON, NEW YORK 10533
TEL: (914) 591-8335 • **FAX:** (914) 591-5870

PHOTOVOLTAIC (PV SOLAR) RESIDENTIAL SYSTEMS PERMIT APPLICATION CHECK LIST

Revised June 7, 2017

It is suggested that all applicants applying for a permit read and understand the manufacture installation instructions prior to applying for a building permit and attached ARB guide lines and Village code for Solar Energy Equipment.

REQUIREMENTS TO APPLY FOR A PHOTOVOLTAIC (PV SOLAR) SYSTEM PERMIT

✓ 1) Apply on line at www.irvingtonny.gov for a mechanical permit, under building permits and along with your application, submit to the building department the following;
✓ 2) Owners phone number and email address entered in the online permit application
✓ 3) Evidence of Workers Compensation Insurance (on a C-105 or equivalent)
✓ 4) Evidence of Liability Insurance naming the Village of Irvington additional insured
✓ 5) A copy of the contractors Westchester County Department of Consumer Protection License
✓ 6) Pursuant to 9-12-A. provide evidence of notice to adjacent properties owners not less than 10 days prior to the meeting (see attached code section for more details)
✓ 7) Submit permit fee: (all fees must be paid at time of submission)
- ✓ $85 application fee
- ✓ $200 for systems up to 5 kilowatts
- ___ $450 for systems above 5 kilowatts and less than 10 kilowatts
- ___ $700 for systems above 10 kilowatts and less than 20 kilowatts
- ___ $700 plus $250 per additional 10 kilowatts above 20 for systems above 20 kilowatts
- ✓ $75 Certificate of Completion inspection and fee

✓ 8) An affidavit from a NYS licensed professional detailing and certifying that the existing structure meets or exceeds the minimum load requirement's as per TABLE R301.2(1) for wind and load before and after installation of the proposed equipment or the proposed upgrades to the existing structure to accomplish the aforesaid.
✓ 9) Drawings (signed and sealed by a NYS licensed professional) of the roof plan showing the following criteria;
- a. ✓ Showing all proposed PV panels on all proposed roof surfaces.
- b. ✓ Showing all equipment on all elevations including
- c. ✓ Show / list all roof connectors and flashing details
- d. ✓ Show compliance with section R902.4 (fire classification in accordance with UL1703 and 3' from any lot line)
- e. ✓ Show compliance with sections R324.3.1 through R324.7.2.5 and NFPA 70 (installation)
- f. ✓ Show compliance with section R324.7 (access and pathways) (see attachment)
- g. ✓ Show compliance with section R324.7.2.1-6. (roof access points) (see attachment)
- h. ✓ Show compliance with section R324.7.3 (ground access areas) (see attachment)
- i. ✓ Show compliance with section R324.7.4 (single ridge roofs *when applicable*) (see attachment)
- j. ✓ Show compliance with section R324.7.5 (hip roofs *when applicable*) (see attachment)
- k. ✓ Show compliance with section R324.7.6 (roof with valleys *when applicable*) (see attachment)
- l. ✓ Show compliance with section R324.7.7 (allowance for smoke ventilation operations) (see attachment)
- m. ✓ Show a Fire Department AC disconnect, located outside by the Utility meter on all systems.

✓ 10) Provide a drawing or manufactures cut sheets of array mounting hardware and interconnection diagram and specifications.
✓ 11) Provide a drawing or manufactures cut sheets of the unit mount and roof penetration's flashing system.
✓ 12) 3 wire diagram showing all proposed equipment as governed by the National Electrical Code (NEC)
✓ 13) Provide a diagram showing all proposed labels and labeling locations including; Solar AC Disconnect, Inverter Output, Connection Warning, Duel Power Source Warning, Solar AC Combiner Panel, Solar PV Circuits Only, Solar Production meter. (see attachment)
___ 14) Provide snow guards on panels were snow has the potential of sliding of the panel into a neighbor's property
✓ 15) Pictures of dwelling showing photo shopped arrays on the structure.
✓ 16) Provide a drawing or photo shop picture of all proposed equipment on all effected elevations (including FD emergency disconnect switch)
✓ 17) A Fire Department AC disconnect, located outside by the Utility meter on all systems.

VILLAGE OF IRVINGTON
BUILDING DEPARTMENT
85 MAIN STREET
IRVINGTON, NEW YORK 10533
TEL: (914) 591-8335 • FAX: (914) 591-5870

✓ 18) Separate Electrical Permit application by a Westchester County Department of Licensing, licensed Electrician with required insurances and the appropriate fee (must be filed by the licensed contractor, see village application for further details).
✓ 19) Submit signed check list with submission and appropriate building permit fee.
✓ 20) Applicant has provided seven copies of the entire submittal for Architectural Review Board approval.

Applicant Affidavit:
Applicants Name: Justine Cognato
Applicants Address: 1073 Rt 94, Unit 4
New Windsor, NY 12553
Applicants Phone # 845-395-6040
Applicants Email jcognato@tesla.com

Applicant Name: Justine Cognato **Signature:** _____ **Date:** _____ **By signing this affidavit I attest to have read the attached Solar Energy Equipment Code and the Solar Equipment Guidelines manufactures installation instructions and that all information asked for above has been submitted and that the submitted information is correct.**

General Contractor Affidavit:
Contractors Name: Tesla Energy Operations, Inc.
Contractors Address: 1073 Route 94, Unit 4
New Windsor, NY 12553
Contractors Phone # 845-395-6040
Contractors Email jcognato@tesla.com

General Contractor Name: Justine Cognato **Signature:** _____ **Date:** _____ **By signing this affidavit I attest to being the general contractor of record for this application and will be responsible for oversite and direct supervision of same, and will maintain a valid Westchester County Department of Consumer Protection License, a valid for Workers Compensation Policy and a General Liability Policy listing the Village of Irvington as Certificate Holder and additional insured with no conditions until such time I apply for and receive a Certificate of Completion.**

Electrical Contractor Affidavit:
Electrical Contractors Name: Frank Saladino of Tesla Energy Operations, Inc.
Electrical Contractors Address: 1073 Rt 94, Unit 4
New Windsor, NY 12553
Electrical Contractors Phone # 845-275-6011
Electrical Contractors Email fsaladino@tesla.com

Electrical Contractor Name: Frank Saladino **Signature:** _____ **Date:** _____ **By signing this affidavit I attest to being the electrical contractor of record for this application and will be responsible for oversite and direct supervision of same, and will maintain a valid Westchester County Electrical License, a valid for Workers Compensation Policy and a General Liability Policy listing the Village of Irvington as Certificate Holder and additional insured with no conditions until such time I apply for and receive a Certificate of Completion.**

Note: Applications for all exterior elevation changes including photovoltaic solar systems are required to apply for, make a presentation in front of, and receive approval from the Village of Irvington Architectural Review Board (ARB) prior to issuance of a building permit. The ARB meetings are the second and fourth Mondays of the month, with a deadline for submissions one week prior to the meetings (see village web site for confirmation of meetings). Seven sets of copies of the entire application are required to be submitted at the deadline with appropriate fee at the time of submission.

Note: The following list above is given to assist in the application process. It is not intended to be a replacement for the Building or Zoning Code, County or State Regulations, or Consolidate Edison Requirements. Unique and Special projects may require additional information.

Hours of Construction: Monday-Friday 7AM-7PM; Saturday 9AM-5PM; Sunday and holiday's construction is prohibited
Only completed applications will be accepted with attached insurance certificates and County license

VILLAGE OF IRVINGTON
BUILDING DEPARTMENT
85 MAIN STREET
IRVINGTON, NEW YORK 10533
TEL: (914) 591-8335 • FAX: (914) 591-5870
Web Site: www.Irvingtonny.gov

LICENSED PROFESSIONAL AFFIDAVIT for RESIDENTIAL SOLAR SYSTEMS

TO BE SUBMITTED AS PART OF THE PERMIT APPLICATION

AFFIDAVIT OF ARCHITECT OR ENGINEER

State of ~~New York~~ PA }
County of ~~Westchester~~ Chester } ss.:

I the undersigned, under penalty of perjury, do hereby affirm:

1. I am an the (architect/ engineer) duly licensed in the State of New York

2. I am the NYS licensed design professional named in the Application for which a Building Permit for a residential solar system located at 5 Stearns Ridge, Irvington, New York 10533.

3. I have inspected the existing building and structure and find that the existing structure with the proposed solar panel installation and connections to the existing roof meet the minimum criteria set forth in;
   Applicable Codes: 2015 Residential Code of New York State
   Design Roof Load: 30 psf live load, 115 psf dead load, 45 psf total load
   Design Wind Load: 120 mph, 35psf
   OR have proposed additional measures to insure compliance with above.

4. I have reviewed the following submitted drawings and/or manufacture specifications as part of the submission
   List applicable plans with revision dates: _____(rev date)_____
   _____(rev date)_____
   _____(rev date)_____
   _____(rev date)_____
   _____(rev date)_____
   _____(rev date)_____

5. The plans, drawings and specifications which the Building Permit is requested and listed above, as submitted (a)-were prepared by me or under my supervision, and (b)-to the best of my knowledge comply with the requirements of the Residential Building Code of New York State as adopted by the Village of Irvington, applicable design loads and all other applicable laws, rules and regulations governing building construction.

Signature

(Architect) Engineer

Sworn to before me this 25 day of February 2021

Notary Public

Commonwealth of Pennsylvania - Notary Seal
Megan J. Suhoskey, Notary Public
Chester County
My commission expires June 12, 2023
Commission number 1156113
Member, Pennsylvania Association of Notaries

STATE OF NEW YORK
CHRIS H. KIM
096407
LICENSED PROFESSIONAL ENGINEER

NOTICE OF APPLICATION AND HEARING

Board of Architectural Review
Clerk's Office
Village of Irvington
Westchester County, New York

CERTIFIED MAIL

Date of Mailing 3/24/2021

NOTICE:
Pursuant to 9-12 of the code of the Village of Irvington notice to adjacent neighbors (as defined below) is required 10 days prior a meeting where an application for Solar Panels to the Village of Irvington Architectural Board is asking to be heard.

Date of Meeting: 4/26/2021
Time of Meeting: Meeting starts at 8pm
Location of Meeting: Trustees Meeting Room
85 Main St. Irvington, NY 10533

Applicant Name	Justine Cognato of Tesla Energy Operations	Owners Name	Jeffrey Glueck
Applicant Mailing Address	New Windsor, NY 12553	Owner Mailing Address	5 Stearns Ridge Irvington, NY 10533
Applicant Phone Number	845-275-6011	Owners Phone Number	917-613-7037
Applicant Email Address	jcognato@tesla.com	Owners Email Address	jeff.glueck@gmail.com

Address of Proposed Solar Panels:
Street Address 5 Stearns Ridge, Irvington, NY 10533

To Adjacent Neighbors of: Jeffrey Glueck
5 Stearns Ridge, Irvington, NY 10533

Please take notice that the applicant named above is requesting the Board of Architectural Review of the Village of Irvington to grant a permit for the installation of **Solar Energy Equipment** to the address listed above.
Plans of the proposed work are available in the office of the Irvington Building Department for public inspection during regular business hours 5 days prior to the scheduled meeting.

9-12. Solar Energy Equipment.
For any application for a building permit for solar energy equipment, written notice of the application and the date, time and place of the meeting at which it will be considered must be given to all adjacent property owners not less than 10 days prior to the meeting date. Notice shall be by a method of mail or a delivery service company providing proof of mailing or delivery or by personal service of such notice on the property owners, evidenced by their signature as acknowledgment of receipt of such notice on a form supplied or similar to one supplied by the Village Clerk. Proof of service of the notice shall be filed prior to or at the meeting at which the application is considered.*
("Adjacent property" refers to any neighbor that shares a property line with the subject property as well as neighbors across any street from the subject property.)

7020 0090 0001 5813 1362

U.S. Postal Service™
CERTIFIED MAIL® RECEIPT
Domestic Mail Only

For delivery information, visit our website at *www.usps.com®*.

OFFICIAL USE

Certified Mail Fee $3.60 — $0.00
Extra Services & Fees (check box, add fee as appropriate)
- Return Receipt (hardcopy) $ $0.00
- Return Receipt (electronic) $ $0.00
- Certified Mail Restricted Delivery $ $0.00
- Adult Signature Required $ $0.00
- Adult Signature Restricted Delivery $

Postage $0.55
Total Postage $4.15

0219 05

Postmark Here
MAR 23 2021
03/24/2021

Sent To
Street and Apt
City, State, Z

Racwell Contracting &
Construction Corp
122 E Sunnyside Lane
Irvington, NY 10533

17 Dearman Close, Irvington, NY 10533

7020 0090 0001 5813 1379

U.S. Postal Service™
CERTIFIED MAIL® RECEIPT
Domestic Mail Only

For delivery information, visit our website at *www.usps.com®*.

OFFICIAL USE

Certified Mail Fee $3.60 — $0.00
Extra Services & Fees (check box, add fee as appropriate)
- Return Receipt (hardcopy) $ $0.00
- Return Receipt (electronic) $ $0.00
- Certified Mail Restricted Delivery $ $0.00
- Adult Signature Required $ $0.00
- Adult Signature Restricted Delivery $

Postage $0.55
Total Postage $4.15

0219 05

Postmark Here
03/24/2021

Sent To
Street and Apt
City, State, Z

School District No. 2
N Broadway
Irvington, NY 10533

PS Form 3800 — See Reverse for Instructions

7020 0090 0001 5813 1348

U.S. Postal Service™
CERTIFIED MAIL® RECEIPT
Domestic Mail Only

For delivery information, visit our website at *www.usps.com®*.

OFFICIAL USE

Certified Mail Fee $3.60 — $0.00
Extra Services & Fees (check box, add fee as appropriate)
- Return Receipt (hardcopy) $ $0.00
- Return Receipt (electronic) $ $0.00
- Certified Mail Restricted Delivery $ $0.00
- Adult Signature Required $ $0.00
- Adult Signature Restricted Delivery $

Postage $0.55
Total Postage $4.15

0219 05

Postmark Here
MAR 23 2021
03/24/2021

Sent To
Street and Apt
City, State, Z

Mary Bunaes
Bard Bunaes
7 Stearns Ridge
Irvington, NY 10533

PS Form 38

7020 0090 0001 5813 1386

U.S. Postal Service™
CERTIFIED MAIL® RECEIPT
Domestic Mail Only

For delivery information, visit our website at *www.usps.com®*.

OFFICIAL USE

Certified Mail Fee $3.60 — $0.00
Extra Services & Fees (check box, add fee as appropriate)
- Return Receipt (hardcopy) $ $0.00
- Return Receipt (electronic) $ $0.00
- Certified Mail Restricted Delivery $ $0.00
- Adult Signature Required $ $0.00
- Adult Signature Restricted Delivery $

Postage $0.55
Total Postage $4.15

0219 05

Postmark Here
MAR 23 2021
03/24/2021

Sent To
Street and Apt
City, State, Z

Ami Patel
Amit Jain
15 Dearman Close
Irvington, NY 10533

PS Form 38

7020 0090 0001 5813 1355

U.S. Postal Service™
CERTIFIED MAIL® RECEIPT
Domestic Mail Only

For delivery information, visit our website at *www.usps.com®*.

OFFICIAL USE

Certified Mail Fee $3.60 — $0.00
Extra Services & Fees (check box, add fee as appropriate)
- Return Receipt (hardcopy) $ $0.00
- Return Receipt (electronic) $ $0.00
- Certified Mail Restricted Delivery $ $0.00
- Adult Signature Required $ $0.00
- Adult Signature Restricted Delivery $

Postage $0.55
Total Postage $4.15

0219 05

Postmark Here
MAR 23 2021
03/24/2021

Sent To
Street and
City, State,

Laurie Falk Davidowitz
James Davidowitz
3 Stearns Ridge
Irvington, NY 10533

PS Form 3

Tracking Number: 70200090000158131355

Your item was delivered to an individual at the address at 11:22 am on March 26, 2021 in IRVINGTON, NY 10533.

Status

Delivered, Left with Individual

March 26, 2021 at 11:22 am
IRVINGTON, NY 10533

Get Updates

Delivered

Tracking Number: 70200090000158131348

Remove X

Your item was delivered to an individual at the address at 11:21 am on March 26, 2021 in IRVINGTON, NY 10533.

Status

Delivered, Left with Individual

March 26, 2021 at 11:21 am
IRVINGTON, NY 10533

Get Updates

Delivered

See More

Tracking Number: 70200090000158131379

Remove X

Your item was delivered at 9:07 am on March 26, 2021 in IRVINGTON, NY 10533.

Status

Delivered

March 26, 2021 at 9:07 am
IRVINGTON, NY 10533

Get Updates

Delivered

See More

Tracking Number: 70200090000158131362

Remove X

Your item was delivered to an individual at the address at 2:01 pm on March 26, 2021 in IRVINGTON, NY 10533.

Status

Delivered, Left with Individual

March 26, 2021 at 2:01 pm
IRVINGTON, NY 10533

Get Updates

Delivered

See More

Tesla Energy Operations, Inc.
1073 Route 94, Unit 4
New Windsor, NY 12553

7020 0090 0001 5813 1386

24 MAR 20

1000

10533

Ami Patel
Amit Jain
15 Dearman Close
Irvington, NY 10533

Vac

U.S. POSTAGE PAID
FIRST-CLASS LETTER
NEW WINDSOR, NY
12553
MAR 24 21
AMOUNT
$3.60
R2304N117453-05

NIXIE 100 DE 1 0003/30/21
RETURN TO SENDER
VACANT
UNABLE TO FORWARD
BC: 12553682204 *1137-01391-24-45

VAC
10533>1348

ACORD®

CERTIFICATE OF LIABILITY INSURANCE

DATE (MM/DD/YYYY)
10/30/2020

THIS CERTIFICATE IS ISSUED AS A MATTER OF INFORMATION ONLY AND CONFERS NO RIGHTS UPON THE CERTIFICATE HOLDER. THIS CERTIFICATE DOES NOT AFFIRMATIVELY OR NEGATIVELY AMEND, EXTEND OR ALTER THE COVERAGE AFFORDED BY THE POLICIES BELOW. THIS CERTIFICATE OF INSURANCE DOES NOT CONSTITUTE A CONTRACT BETWEEN THE ISSUING INSURER(S), AUTHORIZED REPRESENTATIVE OR PRODUCER, AND THE CERTIFICATE HOLDER.

IMPORTANT: If the certificate holder is an ADDITIONAL INSURED, the policy(ies) must have ADDITIONAL INSURED provisions or be endorsed. If SUBROGATION IS WAIVED, subject to the terms and conditions of the policy, certain policies may require an endorsement. A statement on this certificate does not confer rights to the certificate holder in lieu of such endorsement(s).

PRODUCER
MARSH RISK & INSURANCE SERVICES
FOUR EMBARCADERO CENTER, SUITE 1100
CALIFORNIA LICENSE NO. 0437153
SAN FRANCISCO, CA 94111
Attn: SanFrancisco.Certs@marsh.com / FAX 212-948-0398
CN104275261-STND-GAWUE-19-

CONTACT NAME:
PHONE (A/C, No, Ext): **FAX (A/C, No):**
E-MAIL ADDRESS:

INSURER(S) AFFORDING COVERAGE	NAIC #
INSURER A : Zurich American Insurance Company	16535
INSURER B : Steadfast Insurance Company	26387
INSURER C : American Zurich Insurance Company	40142
INSURER D : N/A	N/A
INSURER E :	
INSURER F :	

INSURED
Tesla Energy Operations, Inc.
901 Page Avenue
Fremont, CA 94538

COVERAGES

CERTIFICATE NUMBER: SEA-003419074-30 **REVISION NUMBER:** 18

THIS IS TO CERTIFY THAT THE POLICIES OF INSURANCE LISTED BELOW HAVE BEEN ISSUED TO THE INSURED NAMED ABOVE FOR THE POLICY PERIOD INDICATED. NOTWITHSTANDING ANY REQUIREMENT, TERM OR CONDITION OF ANY CONTRACT OR OTHER DOCUMENT WITH RESPECT TO WHICH THIS CERTIFICATE MAY BE ISSUED OR MAY PERTAIN, THE INSURANCE AFFORDED BY THE POLICIES DESCRIBED HEREIN IS SUBJECT TO ALL THE TERMS, EXCLUSIONS AND CONDITIONS OF SUCH POLICIES. LIMITS SHOWN MAY HAVE BEEN REDUCED BY PAID CLAIMS.

INSR LTR	TYPE OF INSURANCE	ADDL INSD	SUBR WVD	POLICY NUMBER	POLICY EFF (MM/DD/YYYY)	POLICY EXP (MM/DD/YYYY)	LIMITS	
A	X COMMERCIAL GENERAL LIABILITY	X		GLO 1074588-03	10/31/2020	10/31/2021	EACH OCCURRENCE	$ 2,500,000
	CLAIMS-MADE [X] OCCUR			Includes Host Liquor Liability			DAMAGE TO RENTED PREMISES (Ea occurrence)	$ 2,500,000
	X SIR: $750,000						MED EXP (Any one person)	$ 5,000
B	X Tort Contrac Liab, No XCU Excl			SXS-7426362-01 (Excess GL -	10/31/2020	10/31/2021	PERSONAL & ADV INJURY	$ 2,500,000
	GEN'L AGGREGATE LIMIT APPLIES PER			Limit: $6,750,000 excess of primary			GENERAL AGGREGATE	$ 20,000,000
	X POLICY [ ] PRO-JECT [ ] LOC			GL limits on right; applies to			PRODUCTS - COMP/OP AGG	$ 6,000,000
	X OTHER $6M per Project/Loc Agg			Solar Products Only)				$
A	AUTOMOBILE LIABILITY			BAP 1074586-03	10/31/2020	10/31/2021	COMBINED SINGLE LIMIT (Ea accident)	$ 10,000,000
	X ANY AUTO						BODILY INJURY (Per person)	$
B	OWNED AUTOS ONLY / SCHEDULED AUTOS			SXS-7426361-01 ($5M excess of	10/31/2020	10/31/2021	BODILY INJURY (Per accident)	$
	HIRED AUTOS ONLY / NON-OWNED AUTOS ONLY			$5M primary Auto Liability)			PROPERTY DAMAGE (Per accident)	$
								$
	UMBRELLA LIAB / OCCUR						EACH OCCURRENCE	$
	EXCESS LIAB / CLAIMS-MADE						AGGREGATE	$
	DED / RETENTION $							$
C	WORKERS COMPENSATION AND EMPLOYERS' LIABILITY			WC 1074583-03 (AOS)	10/31/2020	10/31/2021	X PER STATUTE / X OTH-ER	
C	ANYPROPRIETOR/PARTNER/EXECUTIVE OFFICER/MEMBER EXCLUDED? Y/N [N]			WC 1074584-03 (MA, WI)	10/31/2020	10/31/2021	E.L. EACH ACCIDENT	$ 1,000,000
A	(Mandatory in NH)	N / A		CA XSWC: EWS 1074585-03 ($50M is	10/31/2020	10/31/2021	E.L. DISEASE - EA EMPLOYEE	$ 1,000,000
	If yes, describe under DESCRIPTION OF OPERATIONS below			$10M SIR; $1M EE/EA is XS $10M SIR)			E.L. DISEASE - POLICY LIMIT	$ 1,000,000

DESCRIPTION OF OPERATIONS / LOCATIONS / VEHICLES (ACORD 101, Additional Remarks Schedule, may be attached if more space is required)
Village of Irvington is included as Additional Insured on the General Liability policy per the attached endorsement, but only with respect to liability arising out of the Named Insured's operations.

CERTIFICATE HOLDER

Village of Irvington
85 Main Street
Irvington, NY 10533

CANCELLATION

SHOULD ANY OF THE ABOVE DESCRIBED POLICIES BE CANCELLED BEFORE THE EXPIRATION DATE THEREOF, NOTICE WILL BE DELIVERED IN ACCORDANCE WITH THE POLICY PROVISIONS.

AUTHORIZED REPRESENTATIVE
of Marsh Risk & Insurance Services

Stephanie Guaiumi *Stephanie Guaium*

© 1988-2016 ACORD CORPORATION. All rights reserved.

The ACORD name and logo are registered marks of ACORD

AGENCY CUSTOMER ID: CN104275261
LOC #: San Francisco

ADDITIONAL REMARKS SCHEDULE

AGENCY MARSH RISK & INSURANCE SERVICES	NAMED INSURED Tesla Energy Operations, Inc. 901 Page Avenue Fremont, CA 94538
POLICY NUMBER	
CARRIER / NAIC CODE	EFFECTIVE DATE:

ADDITIONAL REMARKS

THIS ADDITIONAL REMARKS FORM IS A SCHEDULE TO ACORD FORM,
FORM NUMBER: 25 FORM TITLE: Certificate of Liability Insurance

Umbrella Retention:
$10,000,000 Each Occ. Solar Products (Liability; US Only)
$10,000,000 Each Occ. Auto Liability (Worldwide)
Notable retentions can be fulfilled by policies listed in A & B above.

© 2008 ACORD CORPORATION. All rights reserved.
The ACORD name and logo are registered marks of ACORD

NEW YORK STATE | Workers' Compensation Board

CERTIFICATE OF NYS WORKERS' COMPENSATION INSURANCE COVERAGE

1a. Legal Name & Address of Insured (use street address only) Tesla Energy Operations, Inc. 901 Page Avenue Fremont, CA 94538 Work Location of Insured *(Only required if coverage is specifically limited to certain locations in New York State, i.e., a Wrap-Up Policy)*	1b. Business Telephone Number of Insured 650-963-5100 1c. NYS Unemployment Insurance Employer Registration Number of Insured 49-892777 1d. Federal Employer Identification Number of Insured or Social Security Number 02-0781046
2. Name and Address of Entity Requesting Proof of Coverage (Entity Being Listed as the Certificate Holder) Village of Irvington 85 Main Street Irvington, NY 10533	3a. Name of Insurance Carrier American Zurich Insurance Company 3b. Policy Number of Entity Listed in Box "1a" WC 1074583-03 3c. Policy effective period 10/31/2020 to 10/31/2021 3d. The Proprietor, Partners or Executive Officers are ☒ included. (Only check box if all partners/officers included) all ☐ excluded or certain partners/officers excluded.

This certifies that the insurance carrier indicated above in box "3" insures the business referenced above in box "1a" for workers' compensation under the New York State Workers' Compensation Law. **(To use this form, New York (NY) must be listed under Item 3A on the INFORMATION PAGE of the workers' compensation insurance policy).** The Insurance Carrier or its licensed agent will send this Certificate of Insurance to the entity listed above as the certificate holder in box "2".

The insurance carrier must notify the above certificate holder and the Workers' Compensation Board within 10 days IF a policy is canceled due to nonpayment of premiums or within 30 days IF there are reasons other than nonpayment of premiums that cancel the policy or eliminate the insured from the coverage indicated on this Certificate. (These notices may be sent by regular mail.) **Otherwise, this Certificate is valid for one year after this form is approved by the insurance carrier or its licensed agent, or until the policy expiration date listed in box "3c", whichever is earlier.**

This certificate is issued as a matter of information only and confers no rights upon the certificate holder. This certificate does not amend, extend or alter the coverage afforded by the policy listed, nor does it confer any rights or responsibilities beyond those contained in the referenced policy.

This certificate may be used as evidence of a Workers' Compensation contract of insurance only while the underlying policy is in effect.

Please Note: Upon cancellation of the workers' compensation policy indicated on this form, if the business continues to be named on a permit, license or contract issued by a certificate holder, the business must provide that certificate holder with a new Certificate of Workers' Compensation Coverage or other authorized proof that the business is complying with the mandatory coverage requirements of the New York State Workers' Compensation Law.

Under penalty of perjury, I certify that I am an authorized representative or licensed agent of the insurance carrier referenced above and that the named insured has the coverage as depicted on this form.

Approved by: Susan B. Kendziora
(Print name of authorized representative or licensed agent of insurance carrier)

Approved by: Susan B. Kendziora 10/31/2020
(Signature) (Date)

Title: Vice President-Enterprise Support Operations

Telephone Number of authorized representative or licensed agent of insurance carrier: 800-382-2150

Please Note: Only insurance carriers and their licensed agents are authorized to issue Form C-105.2. Insurance brokers are NOT authorized to issue it.

C-105.2 (9-17) www.wcb.ny.gov

INTERNAL USE ONLY

NEW YORK STATE | Workers' Compensation Board

CERTIFICATE OF INSURANCE COVERAGE
DISABILITY AND PAID FAMILY LEAVE BENEFITS LAW

PART 1. To be completed by Disability and Paid Family Leave Benefits Carrier or Licensed Insurance Agent of that Carrier

1a. Legal Name & Address of Insured (use street address only)

Tesla Energy Operations, Inc.
901 Page Avenue
Fremont, CA 94538

Work Location of Insured *(Only required if coverage is specifically limited to certain locations in New York State, i.e., Wrap-Up Policy)*

1b. Business Telephone Number of Insured

1c. Federal Employer Identification Number of Insured or Social Security Number

02-0781046

2. Name and Address of Entity Requesting Proof of Coverage (Entity Being Listed as the Certificate Holder)

Village of Irvington
85 Main Street
Irvington, NY 10533

3a. Name of Insurance Carrier

The Prudential Insurance Company of America

3b. Policy Number of Entity Listed in Box "1a"

CG-51526-NY

3c. Policy effective period

01/01/2021 to 12/31/2022

4. Policy provides the following benefits:
- [x] A. Both disability and paid family leave benefits.
- [ ] B. Disability benefits only.
- [ ] C. Paid family leave benefits only.

5. Policy covers:
- [x] A. All of the employer's employees eligible under the NYS Disability and Paid Family Leave Benefits Law.
- [ ] B. Only the following class or classes of employer's employees:

Under penalty of perjury, I certify that I am an authorized representative or licensed agent of the insurance carrier referenced above and that the named insured has NYS Disability and/or Paid Family Leave Benefits insurance coverage as described above.

Date Signed December 04, 2020 By _____
(Signature of insurance carrier's authorized representative or NYS Licensed Insurance Agent of that insurance carrier)

Telephone Number 215-658-5178 Name and Title H. Richard Brummett - Statutory Disability Coordinator

IMPORTANT: If Boxes 4A and 5A are checked, and this form is signed by the insurance carrier's authorized representative or NYS Licensed Insurance Agent of that carrier, this certificate is COMPLETE. Mail it directly to the certificate holder.

If Box 4B, 4C or 5B is checked, this certificate is NOT COMPLETE for purposes of Section 220, Subd. 8 of the NYS Disability and Paid Family Leave Benefits Law. It must be mailed for completion to the Workers' Compensation Board, Plans Acceptance Unit, PO Box 5200, Binghamton, NY 13902-5200.

PART 2. To be completed by the NYS Workers' Compensation Board (Only if Box 4C or 5B of Part 1 has been checked)

State of New York
Workers' Compensation Board

According to information maintained by the NYS Workers' Compensation Board, the above-named employer has complied with the NYS Disability and Paid Family Leave Benefits Law with respect to all of his/her employees.

Date Signed _____ By _____
(Signature of Authorized NYS Workers' Compensation Board Employee)

Telephone Number _____ Name and Title _____

Please Note: *Only insurance carriers licensed to write NYS disability and paid family leave benefits insurance policies and NYS licensed insurance agents of those insurance carriers are authorized to issue Form DB-120.1.* ***Insurance brokers are NOT authorized to issue this form.***

George Latimer
Westchester County Executive

Westchestergov.com

James Maisano
Director, Consumer Protection

Department of Consumer Protection
Home Improvement License

TESLA ENERGY OPERATIONS INC

15 TARKETT ROAD - #4

NEW WINDSOR,NY-12553

This license is issued in accordance with Article XVI of the Westchester County Consumer Protection Code and is valid only upon presence of the official department seal. Proof of citizenship or immigration status is not required for issuance of this license.
NOT FOR FEDERAL PURPOSES

License Number

WC-31199-H18

Department of Consumer Protection
Westchester County-NY

Date of Expiration

10/31/2022

© GOES 3461

LITHO IN U.S.A.

Westchester County Electrical Licensing Board
Westchester County Consumer Protection

Master Electrician License 2021

Frank J Saladino
D.O.B: 11/3/1970
Company:
Tesla Energy Operations, Inc
15 Tarkett Drive Unit 4
New Windsor, NY 12553

License No. 1814
Expires on:12/31/2021

Peter Borducci

ABBREVIATIONS

A AMPERE AC ALTERNATING CURRENT BLDG BUILDING CONC CONCRETE DC DIRECT CURRENT EGC EQUIPMENT GROUNDING CONDUCTOR (E) EXISTING EMT ELECTRICAL METALLIC TUBING FSB FIRE SET-BACK GALV GALVANIZED GEC GROUNDING ELECTRODE CONDUCTOR GND GROUND HDG HOT DIPPED GALVANIZED I CURRENT Imp CURRENT AT MAX POWER Isc SHORT CIRCUIT CURRENT kVA KILOVOLT AMPERE kW KILOWATT LBW LOAD BEARING WALL MIN MINIMUM (N) NEW NEUT NEUTRAL NTS NOT TO SCALE OC ON CENTER PL PROPERTY LINE POI POINT OF INTERCONNECTION PV PHOTOVOLTAIC SCH SCHEDULE S STAINLESS STEEL STC STANDARD TESTING CONDITIONS TYP TYPICAL UPS UNINTERRUPTIBLE POWER SUPPLY V VOLT Vmp VOLTAGE AT MAX POWER Voc VOLTAGE AT OPEN CIRCUIT W WATT 3R NEMA 3R, RAINTIGHT

ELECTRICAL NOTES

1. THIS SYSTEM IS GRID-INTERTIED VIA A UL-LISTED POWER-CONDITIONING INVERTER.
2. A NATIONALLY - RECOGNIZED TESTING LABORATORY SHALL LIST ALL EQUIPMENT IN COMPLIANCE WITH ART. 110.3.
3. WHERE ALL TERMINALS OF THE DISCONNECTING MEANS MAY BE ENERGIZED IN THE OPEN POSITION, A SIGN WILL BE PROVIDED WARNING OF THE HAZARDS PER ART. 690.17.
4. EACH UNGROUNDED CONDUCTOR OF THE MULTIWIRE BRANCH CIRCUIT WILL BE IDENTIFIED BY PHASE AND SYSTEM PER ART. 210.5.
5. CIRCUITS OVER 250V TO GROUND SHALL COMPLY WITH ART. 250.97, 250.92(B).
6. DC CONDUCTORS EITHER DO NOT ENTER BUILDING OR ARE RUN IN METALLIC RACEWAYS OR ENCLOSURES TO THE FIRST ACCESSIBLE DC DISCONNECTING MEANS PER ART. 690.31(E).
7. ALL WIRES SHALL BE PROVIDED WITH STRAIN RELIEF AT ALL ENTRY INTO BOXES AS REQUIRED BY UL LISTING.
8. MODULE FRAMES SHALL BE GROUNDED AT THE UL - LISTED LOCATION PROVIDED BY THE MANUFACTURER USING UL LISTED GROUNDING HARDWARE.
9. MODULE FRAMES, RAIL, AND POSTS SHALL BE BONDED WITH EQUIPMENT GROUND CONDUCTORS.

JURISDICTION NOTES

ALL WORK TO COMPLY WITH SECTION R327 OF THE 2020 RESIDENTIAL CODE OF NYS.

LICENSE

MODULE GROUNDING METHOD: ZEP SOLAR

AHJ: Irvington Village

UTILITY: Consolidated Edison

GENERAL NOTES

1. ALL WORK SHALL COMPLY WITH THE 2020 NYS UNIFORM CODE.
2. ALL ELECTRICAL WORK SHALL COMPLY WITH THE 2017 NATIONAL ELECTRIC CODE.
3. ALL WORK SHALL COMPLY WITH THE 2020 NYS FIRE CODE.
4. ALL WORK SHALL COMPLY WITH THE 2020 BUILDING CODE OF NYS.
5. ALL WORK SHALL COMPLY WITH THE 2020 RESIDENTIAL CODE OF NYS.
6. ALL WORK SHALL COMPLY WITH THE 2020 EXISTING BUILDING CODE OF NYS.

VICINITY MAP

INDEX

Sheet 1 COVER SHEET
Sheet 2 SITE PLAN
Sheet 3 STRUCTURAL VIEWS
Sheet 4 UPLIFT CALCULATIONS
Sheet 5 THREE LINE DIAGRAM
Sheet 6 THREE LINE DIAGRAM
Sheet 7 RENDER OF THE AERIAL AND STREET VIEW
Sheet 8 ELECTRICAL EQUIPMENT ELEVATION
Sheet 9 EQUIPEMENT LOCATION
Cutsheets Attached

REV BY DATE COMMENTS

REV A	NAME	DATE	COMMENTS
*	*	*	*
*	*	*	*
*	*	*	*
*	*	*	*

CONFIDENTIAL - THE INFORMATION HEREIN CONTAINED SHALL NOT BE USED FOR THE BENEFIT OF ANYONE EXCEPT TESLA INC., NOR SHALL IT BE DISCLOSED IN WHOLE OR IN PART TO OTHERS OUTSIDE THE RECIPIENT'S ORGANIZATION, EXCEPT IN CONNECTION WITH THE SALE AND USE OF THE RESPECTIVE TESLA EQUIPMENT, WITHOUT THE WRITTEN PERMISSION OF TESLA INC.

JOB NUMBER: JB-1054392 00

MOUNTING SYSTEM: ZS Comp V4 w Flashing-Insert

MODULES: (12) Hanwha Q-CELLS # Q.Peak DUO BLK-G6+ 340

INVERTER: 3.8 kW Tesla Inc 1534000-00-E (240V)

CUSTOMER:
Jeffrey Glueck
5 Stearns Ridge
Irvington, NY 10533

9176137037

DESCRIPTION:
4.08 KW PV ARRAY
13.5 KWH ENERGY STORAGE SYSTEM

PAGE NAME: COVER SHEET

DESIGN: Jose Martin Marcelino Mendoza

SHEET: 1 REV: DATE: 3/22/2021

TESLA

PV CIRCUIT BREAKER OR SWITCH
MUST BE
LABELED '89L' OR 'GENERATOR
DISCONNECT SWITCH'

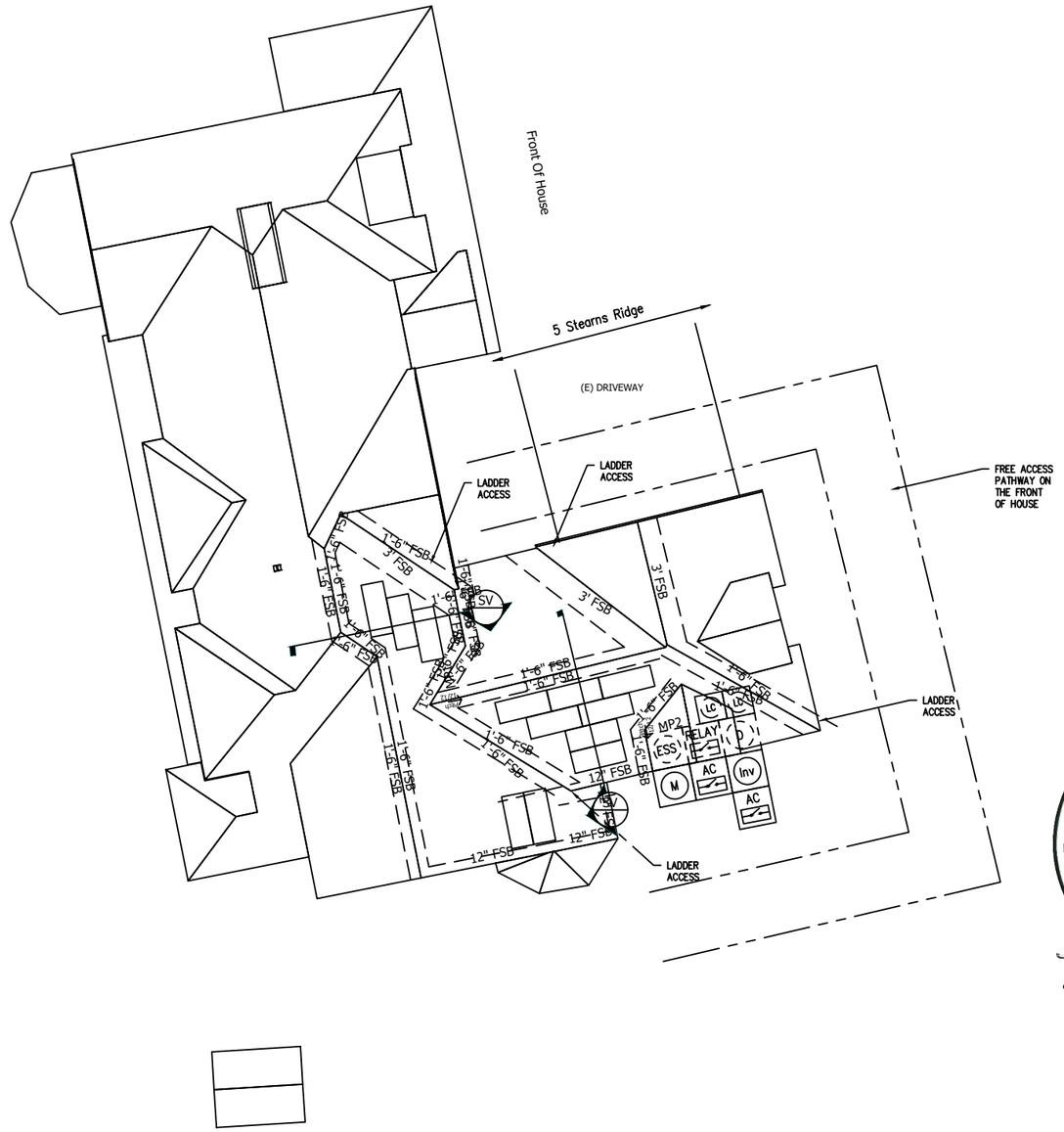

AC disconnect, located outside by the Utility Meter to disconnect all generation sources.

CUSTOMER UTILITY NUMBER:
5117022229805018

SITE PLAN

Scale:1/16" = 1'

01' 16' 32'

N W E S

MP1	PITCH: 45 AZIMUTH: 78 MATERIAL: Comp Shingle	ARRAY PITCH: 45 ARRAY AZIMUTH: 78 STORY: 2 Stories
MP2	PITCH: 45 AZIMUTH: 166 MATERIAL: Comp Shingle	ARRAY PITCH: 45 ARRAY AZIMUTH: 166 STORY: 2 Stories

LEGEND

- (M) (E) UTILITY METER & WARNING LABEL
- (Inv) INVERTER W/ INTEGRATED DC DISCO & WARNING LABELS
- RELAY AUTOMATIC RELAY
- DC DC DISCONNECT & WARNING LABELS
- AC AC DISCONNECT & WARNING LABELS
- (B) DC JUNCTION/COMBINER BOX & LABELS
- (ESS) ENERGY STORAGE SYSTEM FOR STAND ALONE OPERATION
- (D) DISTRIBUTION PANEL & LABELS
- (LC) LOAD CENTER & WARNING LABELS
- (M) DEDICATED PV SYSTEM METER
- (RSD) RAPID SHUTDOWN
- STANDOFF LOCATIONS
- CONDUIT RUN ON EXTERIOR
- CONDUIT RUN ON INTERIOR
- GATE/FENCE
- HEAT PRODUCING VENTS ARE RED
- INTERIOR EQUIPMENT IS DASHED

STATE OF NEW YORK
CHRIS H. KIM
EXCELSIOR
096407
LICENSED PROFESSIONAL ENGINEER

CONFIDENTIAL – THE INFORMATION HEREIN CONTAINED SHALL NOT BE USED FOR THE BENEFIT OF ANYONE EXCEPT TESLA INC., NOR SHALL IT BE DISCLOSED IN WHOLE OR IN PART TO OTHERS OUTSIDE THE RECIPIENT'S ORGANIZATION, EXCEPT IN CONNECTION WITH THE SALE AND USE OF THE RESPECTIVE TESLA EQUIPMENT, WITHOUT THE WRITTEN PERMISSION OF TESLA INC.

JOB NUMBER: JB–1054392 00
MOUNTING SYSTEM: ZS Comp V4 w Flashing–Insert
MODULES: (12) Hanwha Q–CELLS # Q.Peak DUO BLK–G6+ 340
INVERTER: 3.8 kW Tesla Inc 1534000–00–E (240V)

CUSTOMER:
Jeffrey Glueck
5 Stearns Ridge
Irvington, NY 10533

9176137037

DESCRIPTION:
4.08 KW PV ARRAY
13.5 KWH ENERGY STORAGE SYSTEM

PAGE NAME:
SITE PLAN

DESIGN:
Jose Martin Marcelino Mendoza

SHEET: 2
REV:
DATE: 3/22/2021

TESLA

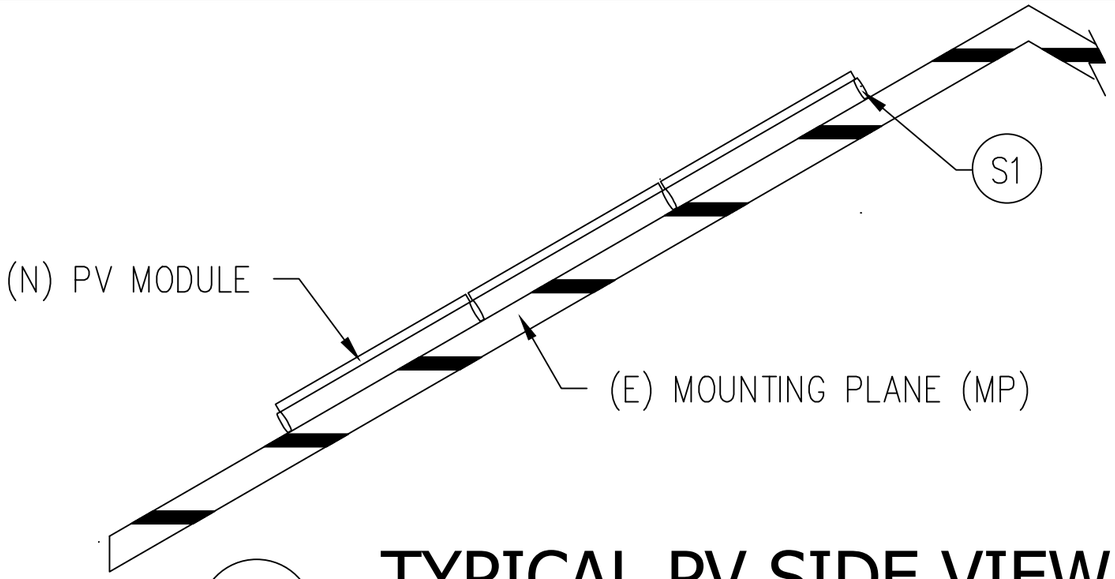

SV TYPICAL PV SIDE VIEW

NTS

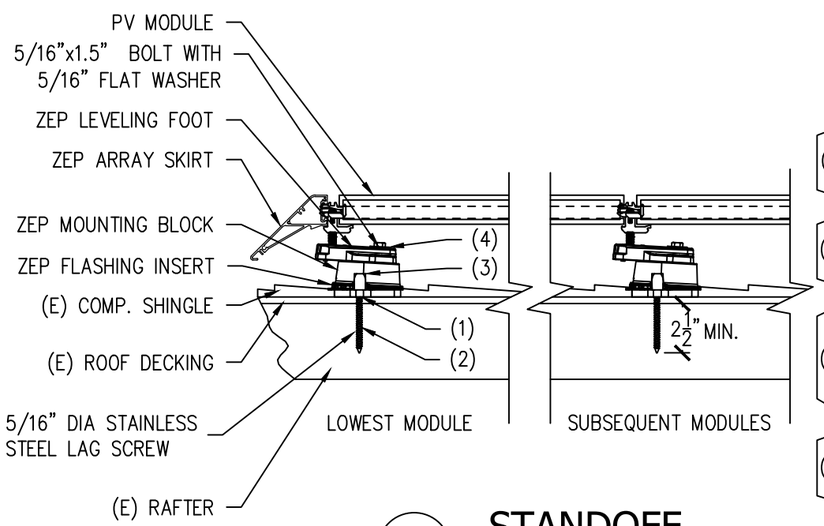

INSTALLATION ORDER	
(1)	LOCATE RAFTER, MARK HOLE LOCATION, AND DRILL PILOT HOLE.
(2)	ATTACH FLASHING INSERT TO MOUNTING BLOCK AND ATTACH TO RAFTER USING LAG SCREW.
(3)	INJECT SEALANT INTO FLASHING INSERT PORT, WHICH SPREADS SEALANT EVENLY OVER THE ROOF PENETRATION.
(4)	INSTALL LEVELING FOOT ON TOP OF MOUNTING BLOCK & SECURELY FASTEN WITH BOLT.

S1 STANDOFF

Scale: 1 1/2" = 1'

CONFIDENTIAL – THE INFORMATION HEREIN CONTAINED SHALL NOT BE USED FOR THE BENEFIT OF ANYONE EXCEPT TESLA INC., NOR SHALL IT BE DISCLOSED IN WHOLE OR IN PART TO OTHERS OUTSIDE THE RECIPIENT'S ORGANIZATION, EXCEPT IN CONNECTION WITH THE SALE AND USE OF THE RESPECTIVE TESLA EQUIPMENT, WITHOUT THE WRITTEN PERMISSION OF TESLA INC.

JOB NUMBER: JB–1054392 00

MOUNTING SYSTEM: ZS Comp V4 w Flashing–Insert

MODULES: (12) Hanwha Q–CELLS # Q.Peak DUO BLK–G6+ 340

INVERTER: 3.8 kW Tesla Inc 1534000–00–E (240V)

CUSTOMER:
Jeffrey Glueck
5 Stearns Ridge
Irvington, NY 10533

9176137037

DESCRIPTION:
4.08 KW PV ARRAY
13.5 KWH ENERGY STORAGE SYSTEM

PAGE NAME: STRUCTURAL VIEWS

DESIGN: Jose Martin Marcelino Mendoza

SHEET: 3 REV: DATE: 3/22/2021

TESLA

Jobsite Specific Design Criteria			
Design Code		ASCE 7-16	
Risk Category		II	Table 1.5-1
Ultimate Wind Speed	V-Ult	120	Fig. 1609A
Exposure Category		C	Section 26.7
Ground Snow Load	pg	35	Table 7-1
Edge Zone Width	a	8.7 ft	Fig. 30.3-2A to I

MP Specific Design Information		
MP Name	MP1	MP2
Roofing	Comp Shingle	Comp Shingle
Standoff	ZS Comp V4 w Flashing-Insert	ZS Comp V4 w Flashing-Insert
Pitch	45	45
SL/RLL: PV	10.1	10.1
SL/RLL: Non-PV	18.6	18.6

Standoff Spacing and Layout		
MP Name	MP1	MP2
Landscape X-Spacing	64	64
Landscape X-Cantilever	24	24
Landscape Y-Spacing	41	41
Landscape Y-Cantilever	-	-
Portrait X-Spacing	48	48
Portrait X-Cantilever	20	20
Portrait Y-Spacing	69	69
Portrait Y-Cantilever	-	-
Layout	Staggered	Staggered
X and Y are maximums that are always relative to the structure framing that supports the PV. X is across rafters and Y is along rafters.		

CONFIDENTIAL - THE INFORMATION HEREIN CONTAINED SHALL NOT BE USED FOR THE BENEFIT OF ANYONE EXCEPT TESLA INC., NOR SHALL IT BE DISCLOSED IN WHOLE OR IN PART TO OTHERS OUTSIDE THE RECIPIENT'S ORGANIZATION, EXCEPT IN CONNECTION WITH THE SALE AND USE OF THE RESPECTIVE TESLA EQUIPMENT, WITHOUT THE WRITTEN PERMISSION OF TESLA INC.

JOB NUMBER: JB-1054392 00

MOUNTING SYSTEM: ZS Comp V4 w Flashing-Insert

MODULES: (12) Hanwha Q-CELLS # Q.Peak DUO BLK-G6+ 340

INVERTER: 3.8 kW Tesla Inc 1534000-00-E (240V)

CUSTOMER:
Jeffrey Glueck
5 Stearns Ridge
Irvington, NY 10533

9176137037

DESCRIPTION:
4.08 KW PV ARRAY
13.5 KWH ENERGY STORAGE SYSTEM

PAGE NAME:
UPLIFT CALCULATIONS

DESIGN:
Jose Martin Marcelino Mendoza

SHEET: 4 REV: DATE: 3/22/2021

TESLA

GROUND SPECS	MAIN PANEL SPECS	GENERAL NOTES			LICENSE
BOND (N) AWG #6 TO (N) GROUND ROD AT PANEL WITH IRREVERSIBLE CRIMP	Panel Number: NoLabel Meter Number: 69 427 505 Underground Service Entrance CUSTOMER UTILITY NUMBER: 5117022229805018	*			

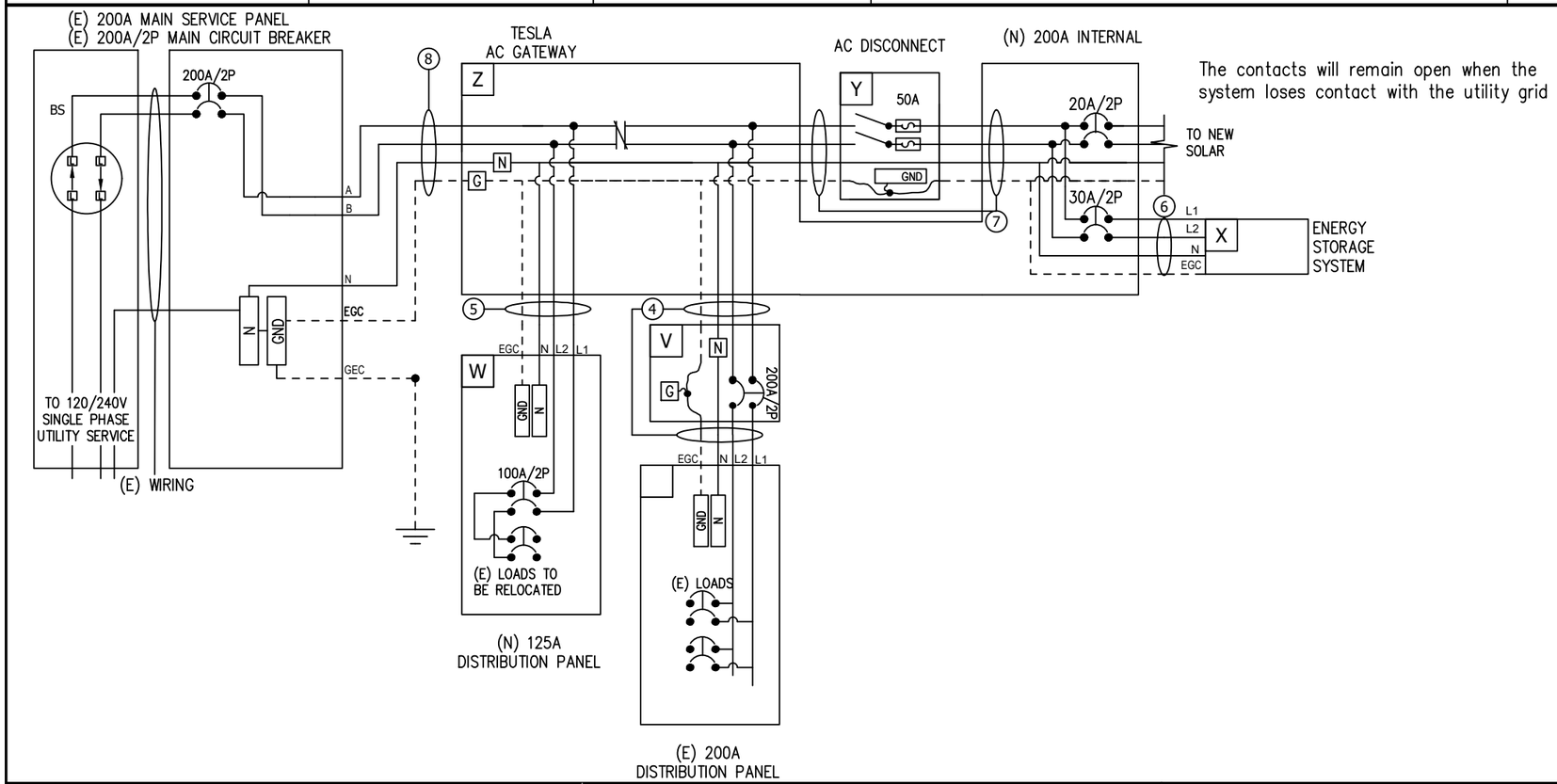

POI
- (1) Ground Rod 5/8" x 8', Copper

Z
- (1) Tesla # 1232100-00-E Back-up Gateway 2.0 NA for AC PW 2.0
- (1) CUTLER-HAMMER # BR230 Breaker; 30A/2P, 2 Spaces
- (1) CUTLER-HAMMER # BR220 Breaker; 20A/2P, 2 Spaces
- (1) Panelboard Accessory Kit for GW 2.0 NA 200A, 6sp/12cir, 120/240V, 1PH

Y
- (1) CUTLER-HAMMER #DS16FK Class R Fuse Kit
- (2) FERRAZ SHAWMUT # TR50R Fuse; 50A, 250V, Class RK5
- (1) CUTLER-HAMMER # DG100NB Ground/Neutral Kit; 60-100A, General Duty (DG)

X
- (1) CUTLER-HAMMER # DG222NRB Disconnect; 60A, 240Vac, Fusible, NEMA 3R
- (1) 1092170-05-J TESLA AC POWERWALL 2.0; Home Energy Storage,13.5KWH, Stackable, 5.8kVA

W
- (1) SQUARE D #HOM1224L125PRB Load Center;125A,Convertible,NEMA3R,12sp/24Cir,120v/240v,10kAIC,Surface
- (1) SQUARE D # HOM2100 Breaker; 100A/2P, 2 Spaces
- (1) SQUARE D #HOM4RK2HA Retaining Kit; 100A-125A Convertible LCs, Series S01 & S02

V
- (1) Square D # QBL22200 200A Circuit Breaker; MolD #eD # Case, 2-Pole, 240V, 10kAIC
- (1) SQUARE D #Q222200NRB Enclosure Only;200A Max Accepts Q Series Breakers

AC

4 — 5ft
- (3) AWG #2/0, THWN-2, Black
- (1) AWG #6, THWN-2, Green
- (1) Conduit 2" PVC; Schedule 80

5 — 5ft
- (1) AWG #3, THWN-2, Black
- (1) AWG #3, THWN-2, Red
- (1) AWG #3, THWN-2, White
- (1) AWG #8, THWN-2, Green — (1) Conduit Kit; 1" EMT

6 — 2ft
- (1) AWG #10, THWN-2, Black
- (1) AWG #10, THWN-2, Red
- (1) AWG #10, THWN-2, White
- (1) AWG #10, THWN-2, Green — (1) Conduit Kit; 3/4" EMT

7 — 2ft
- (1) AWG #8, THWN-2, Black
- (1) AWG #8, THWN-2, Red
- (1) AWG #8, THWN-2, White — (1) AWG #10, THWN-2, Green

8 — 5ft
- (3) AWG #2/0, THWN-2, Black
- (1) AWG #6, THWN-2, Green
- (1) Conduit 2" PVC; Schedule 80

CONFIDENTIAL – THE INFORMATION HEREIN CONTAINED SHALL NOT BE USED FOR THE BENEFIT OF ANYONE EXCEPT TESLA INC., NOR SHALL IT BE DISCLOSED IN WHOLE OR IN PART TO OTHERS OUTSIDE THE RECIPIENT'S ORGANIZATION, EXCEPT IN CONNECTION WITH THE SALE AND USE OF THE RESPECTIVE TESLA EQUIPMENT, WITHOUT THE WRITTEN PERMISSION OF TESLA INC.

JOB NUMBER: JB-1054392 00

MOUNTING SYSTEM: ZS Comp V4 w Flashing-Insert

MODULES: (12) Hanwha Q-CELLS # Q.Peak DUO BLK-G6+ 340

INVERTER: 3.8 kW Tesla Inc 1534000-00-E (240V)

CUSTOMER:
Jeffrey Glueck
5 Stearns Ridge
Irvington, NY 10533

9176137037

DESCRIPTION:
4.08 KW PV ARRAY
13.5 KWH ENERGY STORAGE SYSTEM

PAGE NAME:
THREE LINE DIAGRAM

DESIGN: Jose Martin Marcelino Mendoza

SHEET: 5 REV: DATE: 3/22/2021

TESLA

GROUND SPECS	MAIN PANEL SPECS	GENERAL NOTES	INVERTER SPECS	MODULE SPECS	LICENSE
	Panel Number: Meter Number:	Inv 1: DC Ungrounded	INV 1 – (1) 3.8 kW Tesla Inc 1534000-00-E (240V) INV 2 INV 3	– (12) Hanwha Q-CELLS # Q.Peak DUO BLK-G6+ 340 PV Module; 340W, 318.1 PTC, 40MM, Black Fr, MC4, ZEP, 1000V Voc: 40.66 Vpmax: 33.94 Isc AND Imp ARE SHOWN IN THE DC STRINGS IDENTIFIER	

Inverter 1 IND

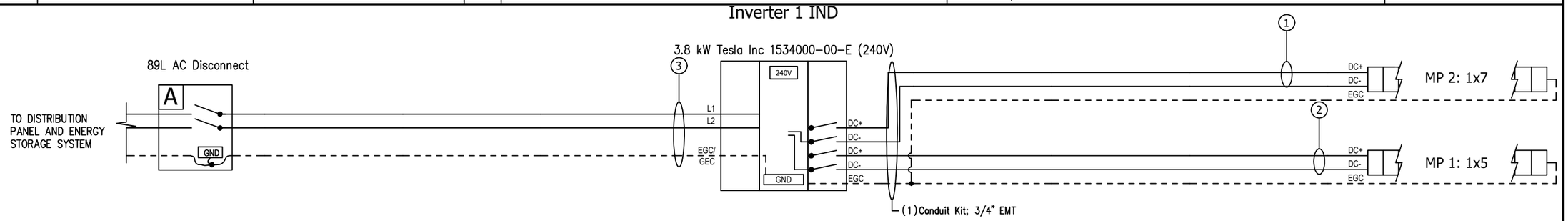

EGC ON ROOF TO BE ROUTED WHERE NOT SUBJECT TO PHYSICAL DAMAGE. WHEN ROUTED SUBJECT TO PHYSICAL DAMAGE THE SIZE MUST BE INCREASED TO #6 SOLID BARE COPPER.

THE GATEWAY WILL REMAIN OPEN WHEN THE SYSTEM LOSES CONTACT WITH THE UTILITY GRID

AC POWERWALL HAS A BUILT IN INVERTER TESTED TO UL 1741 STANDARDS

MAIN SERVICE PANEL ENERGIZED FROM UTILITY AND BATTERY STORAGE

POWERWALL MODES OF OPERATION ARE TIME BASED CONTROL OR BACK UP ONLY.

CUSTOMER UTILITY NUMBER:
5117022229805018

Voc* = MAX VOC AT MIN TEMP

AC

A
- (1)CUTLER-HAMMER # DG221URB Disconnect; 30A, 240Vac, Non-Fusible, NEMA 3R
- (1)CUTLER-HAMMER # DG030NB Ground/Neutral Kit; 30A, General Duty (DG)

3 (10ft)
- (1)AWG #10, THWN-2, Black
- (1)AWG #10, THWN-2, Red
- (1)AWG #10, THWN-2, Green EGC Vmp =240 VAC Imp=16 AAC
- (1)Conduit Kit; 3/4" EMT

DC

GD
- Please see MCI wiring detail page for more information

PV
- (5)1550379-00-D MCI, TESLA, 600V, 13A

1 (70ft)
- (2)AWG #10, PV Wire, 600V, Black Voc* = 330.73VDC Isc = 10.52 ADC
- (1)AWG #6, Solid Bare Copper EGC Vmp = 237.58VDC Imp= 10.02 ADC
- (1)Conduit Kit; 3/4" EMT

2 (65ft)
- (2)AWG #10, PV Wire, 600V, Black Voc* = 236.23VDC Isc = 10.52 ADC
- (1)AWG #6, Solid Bare Copper EGC Vmp = 169.7 VDC Imp= 10.02 ADC
- (1)Conduit Kit; 3/4" EMT

CONFIDENTIAL – THE INFORMATION HEREIN CONTAINED SHALL NOT BE USED FOR THE BENEFIT OF ANYONE EXCEPT TESLA INC., NOR SHALL IT BE DISCLOSED IN WHOLE OR IN PART TO OTHERS OUTSIDE THE RECIPIENT'S ORGANIZATION, EXCEPT IN CONNECTION WITH THE SALE AND USE OF THE RESPECTIVE TESLA EQUIPMENT, WITHOUT THE WRITTEN PERMISSION OF TESLA INC.

JOB NUMBER: JB-1054392 00
MOUNTING SYSTEM: ZS Comp V4 w Flashing-Insert
MODULES: (12) Hanwha Q-CELLS # Q.Peak DUO BLK-G6+ 340
INVERTER: 3.8 kW Tesla Inc 1534000-00-E (240V)

CUSTOMER:
Jeffrey Glueck
5 Stearns Ridge
Irvington, NY 10533
9176137037

DESCRIPTION:
4.08 KW PV ARRAY
13.5 KWH ENERGY STORAGE SYSTEM

PAGE NAME:
THREE LINE DIAGRAM

DESIGN:
Jose Martin Marcelino Mendoza

SHEET: 6 REV: DATE: 3/22/2021

TESLA

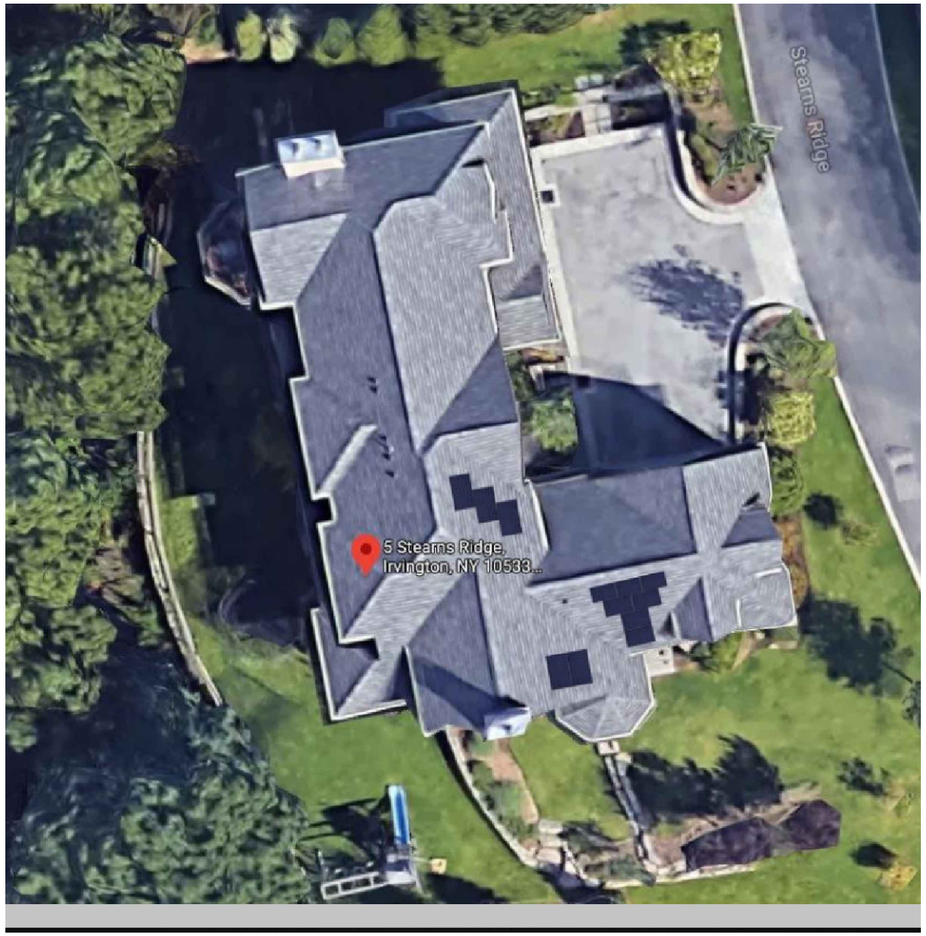

CONFIDENTIAL – THE INFORMATION HEREIN CONTAINED SHALL NOT BE USED FOR THE BENEFIT OF ANYONE EXCEPT TESLA INC., NOR SHALL IT BE DISCLOSED IN WHOLE OR IN PART TO OTHERS OUTSIDE THE RECIPIENT'S ORGANIZATION, EXCEPT IN CONNECTION WITH THE SALE AND USE OF THE RESPECTIVE TESLA EQUIPMENT, WITHOUT THE WRITTEN PERMISSION OF TESLA INC.

JOB NUMBER: JB–1054392 00

MOUNTING SYSTEM: ZS Comp V4 w Flashing–Insert

MODULES: (12) Hanwha Q–CELLS # Q.Peak DUO BLK–G6+ 340

INVERTER: 3.8 kW Tesla Inc 1534000–00–E (240V)

CUSTOMER:
Jeffrey Glueck
5 Stearns Ridge
Irvington, NY 10533

9176137037

DESCRIPTION:
4.08 KW PV ARRAY
13.5 KWH ENERGY STORAGE SYSTEM

PAGE NAME:
RENDER OF THE AERIAL AND STREET VIEW

DESIGN: Jose Martin Marcelino Mendoza

SHEET: 7 REV: DATE: 3/22/2021

TESLA

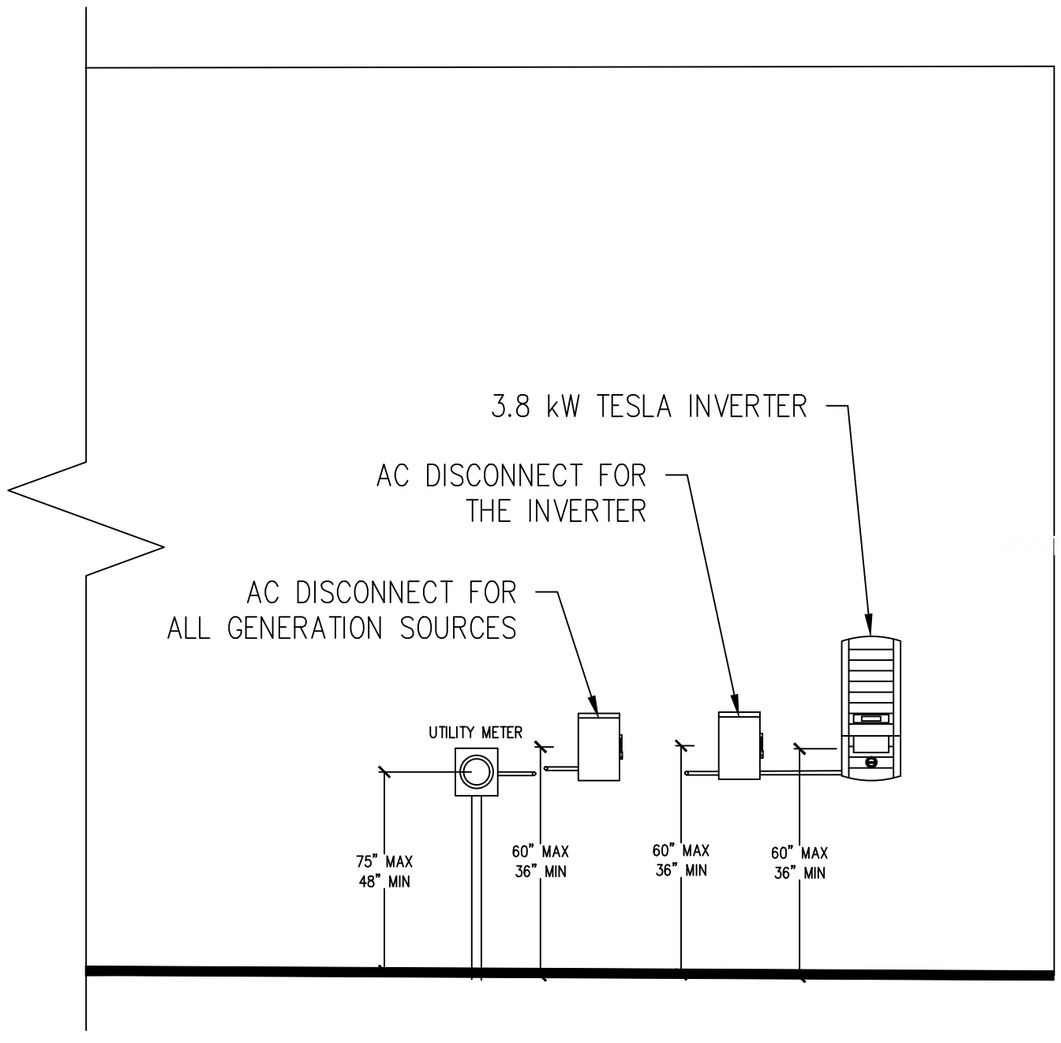

E1 EQUIPMENT ELEVATION (EXTERIOR)

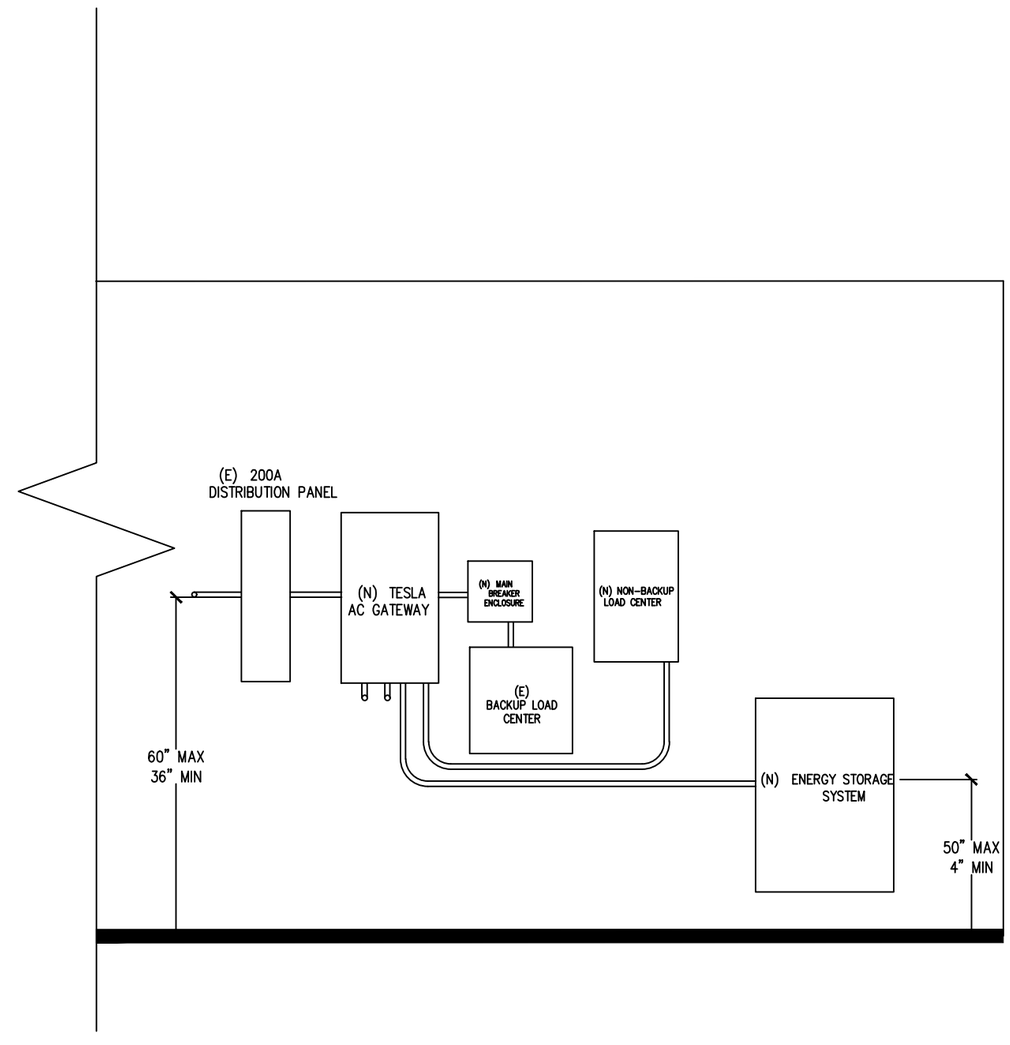

E2 EQUIPMENT ELEVATION (GARAGE)

CONFIDENTIAL – THE INFORMATION HEREIN CONTAINED SHALL NOT BE USED FOR THE BENEFIT OF ANYONE EXCEPT TESLA INC., NOR SHALL IT BE DISCLOSED IN WHOLE OR IN PART TO OTHERS OUTSIDE THE RECIPIENT'S ORGANIZATION, EXCEPT IN CONNECTION WITH THE SALE AND USE OF THE RESPECTIVE TESLA EQUIPMENT, WITHOUT THE WRITTEN PERMISSION OF TESLA INC.

JOB NUMBER: JB–1054392 00

MOUNTING SYSTEM: ZS Comp V4 w Flashing–Insert

MODULES: (12) Hanwha Q–CELLS # Q.Peak DUO BLK–G6+ 340

INVERTER: 3.8 kW Tesla Inc 1534000–00–E (240V)

CUSTOMER:
Jeffrey Glueck
5 Stearns Ridge
Irvington, NY 10533

9176137037

DESCRIPTION:
4.08 KW PV ARRAY
13.5 KWH ENERGY STORAGE SYSTEM

PAGE NAME:
ELECTRICAL EQUIPMENT ELEVATION

DESIGN: Jose Martin Marcelino Mendoza

SHEET: 8 REV: DATE: 3/22/2021

TESLA

EQUIPMENT OUTSIDE

EQUIPMENT INSIDE

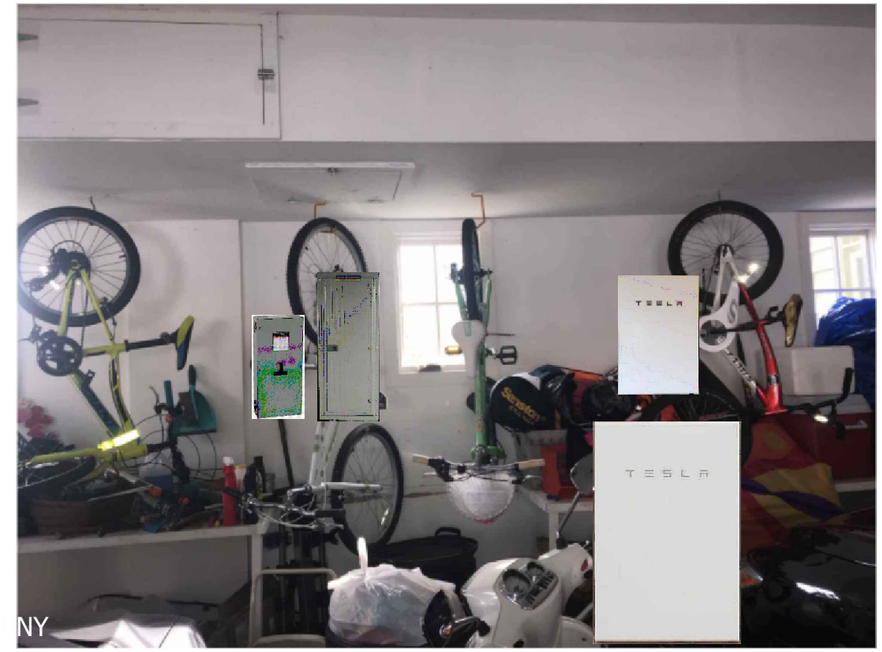

SPACE WILL BE CLEARED HERE TO ACCOMMODATE ESS, MAIN BREAKER ENCLOSURE AND NON BACKUP LOAD CENTER

(E) SOLO MAIN BREAKER AND
(E) BACKUP LOAD CENTER

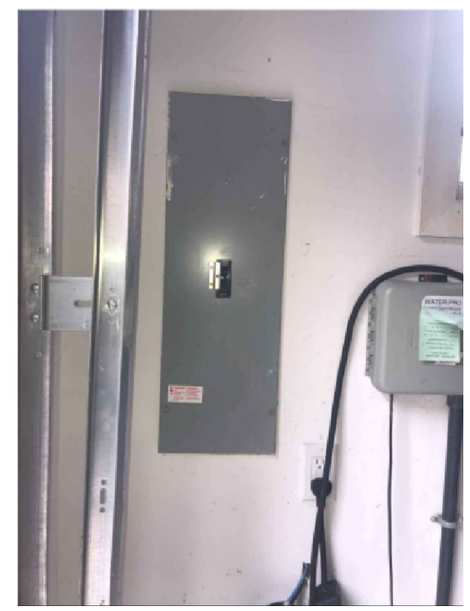

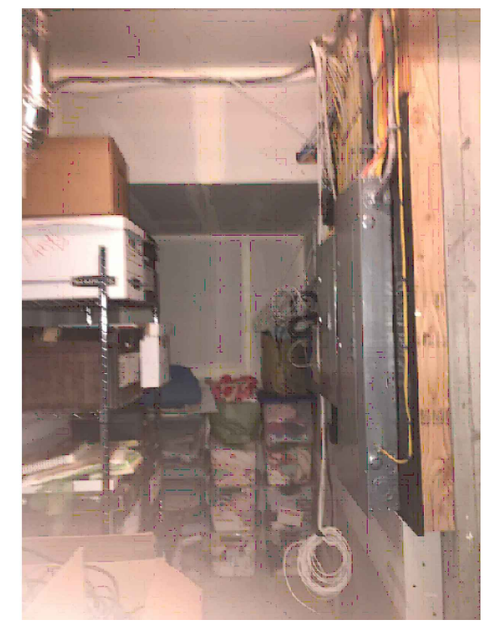

CONFIDENTIAL – THE INFORMATION HEREIN CONTAINED SHALL NOT BE USED FOR THE BENEFIT OF ANYONE EXCEPT TESLA INC., NOR SHALL IT BE DISCLOSED IN WHOLE OR IN PART TO OTHERS OUTSIDE THE RECIPIENT'S ORGANIZATION, EXCEPT IN CONNECTION WITH THE SALE AND USE OF THE RESPECTIVE TESLA EQUIPMENT, WITHOUT THE WRITTEN PERMISSION OF TESLA INC.

JOB NUMBER: JB–1054392 00

MOUNTING SYSTEM: ZS Comp V4 w Flashing–Insert

MODULES: (12) Hanwha Q–CELLS # Q.Peak DUO BLK–G6+ 340

INVERTER: 3.8 kW Tesla Inc 1534000–00–E (240V)

CUSTOMER:
Jeffrey Glueck
5 Stearns Ridge
Irvington, NY 10533

9176137037

DESCRIPTION:
4.08 KW PV ARRAY
13.5 KWH ENERGY STORAGE SYSTEM

PAGE NAME:
EQUIPEMENT LOCATION

DESIGN: Jose Martin Marcelino Mendoza

SHEET: 9 REV: DATE: 3/22/2021

TESLA

WARNING: PHOTOVOLTAIC POWER SOURCE

Label Location:
(C)(CB)(JB)
Per Code:
NEC 690.31.G.3

PHOTOVOLTAIC DC DISCONNECT

Label Location:
(DC) (INV)
Per Code:
NEC 690.13.B

MAXIMUM VOLTAGE

MAXIMUM CIRCUIT CURRENT

MAX RATED OUTPUT CURRENT OF THE CHARGE CONTROLLER OR DC-TO-DC CONVERTER (IF INSTALLED)

Label Location:
(DC) (INV)
Per Code:
NEC 690.53

WARNING
ELECTRIC SHOCK HAZARD
IF A GROUND FAULT IS INDICATED
NORMALLY GROUNDED
CONDUCTORS MAY BE
UNGROUNDED AND ENERGIZED

Label Location:
(DC) (INV)
Per Code:
690.41.B

PHOTOVOLTAIC AC DISCONNECT

Label Location:
(AC) (POI)
Per Code:
NEC 690.13.B

MAXIMUM AC OPERATING CURRENT A

MAXIMUM AC OPERATING VOLTAGE V

Label Location:
(AC) (POI)
Per Code:
NEC 690.54

WARNING
ELECTRIC SHOCK HAZARD
DO NOT TOUCH TERMINALS
TERMINALS ON BOTH LINE AND
LOAD SIDES MAY BE ENERGIZED
IN THE OPEN POSITION

Label Location:
(AC)(POI)
Per Code:
NEC 690.13.B

CAUTION
DUAL POWER SOURCE
SECOND SOURCE IS
PHOTOVOLTAIC SYSTEM

Label Location:
(POI)
Per Code:
NEC 705.12.B.3

WARNING
INVERTER OUTPUT
CONNECTION
DO NOT RELOCATE
THIS OVERCURRENT
DEVICE

Label Location:
(POI)
Per Code:
NEC 705.12.B.2.3.b

PHOTOVOLTAIC SYSTEM
EQUIPPED WITH RAPID
SHUTDOWN

Label Location:
(INV)
Per Code:
NEC 690.56.C.3

WARNING
ELECTRIC SHOCK HAZARD
THE DC CONDUCTORS OF THIS
PHOTOVOLTAIC SYSTEM ARE
UNGROUNDED AND
MAY BE ENERGIZED

Label Location:
(DC) (INV)

SOLAR PV SYSTEM EQUIPPED WITH RAPID SHUTDOWN

TURN RAPID SHUTDOWN SWITCH TO THE "OFF" POSITION TO SHUT DOWN PV SYSTEM AND REDUCE SHOCK HAZARD IN THE ARRAY.

SOLAR ELECTRIC PV PANELS

Label Location:
ABB/Delta Solivia Inverter
Per Code:
690.56(C)(1)(b)

SOLAR PV SYSTEM EQUIPPED WITH RAPID SHUTDOWN

TURN RAPID SHUTDOWN SWITCH TO THE "OFF" POSITION TO SHUT DOWN PV SYSTEM AND REDUCE SHOCK HAZARD IN THE ARRAY.

SOLAR ELECTRIC PV PANELS

Label Location:
SolarEdge and,Delta M-Series and,Telsa Inverter
Per Code:
690.56(C)(1)(a)

(AC): AC Disconnect
(C): Conduit
(CB): Combiner Box
(D): Distribution Panel
(DC): DC Disconnect
(IC): Interior Run Conduit
(INV): Inverter With Integrated DC Disconnect
(LC): Load Center
(M): Utility Meter
(POI): Point of Interconnection

Label Set

BACKUP LOAD CENTER

Label Location:
(BLC)
Per Code:
NEC 408.4

CAUTION
DO NOT ADD NEW LOADS

Label Location:
(BLC)
Per Code:
NEC 220

CAUTION
THIS PANEL HAS SPLICED FEED-THROUGH CONDUCTORS.
LOCATION OF DISCONNECT AT ENERGY STORAGE BACKUP LOAD PANEL

Label Location:
(MP)
Per Code:
NEC 312.8.A(3)

CAUTION
DUAL POWER SOURCE
SECOND SOURCE IS
ENERGY STORAGE SYSTEM

Label Location:
(MP)
Per Code:
NEC 705.12(B)(3)

ENERGY STORAGE SYSTEM ON SITE
LOCATED WITHIN LINE OF SIGHT

Label Location:
(MP)
Per Code:

ENERGY STORAGE SYSTEM ON SITE
LOCATED ON ADJACENT WALL

Label Location:
(MP)
Per Code:

ENERGY STORAGE SYSTEM ON SITE
LOCATED ON OPPOSITE WALL

Label Location:
(MP)
Per Code:

ENERGY STORAGE SYSTEM ON SITE
LOCATED INSIDE

Label Location:
(MP)
Per Code:

CAUTION
TRI POWER SOURCE
SECOND SOURCE IS PHOTOVOLTAIC SYSTEM
THIRD SOURCE IS ENERGY STORAGE SYSTEM

Label Location:
(MP)
Per Code:
NEC 705.12(B)(3)

WARNING
THIS EQUIPMENT FED BY MULTIPLE SOURCES. TOTAL RATING OF ALL OVER CURRENT DEVICES, EXCLUDING MAIN SUPPLY OVERCURRENT DEVICE, SHALL NOT EXCEED AMPACITY OF BUSBAR.

Label Location:
(MP)
Per Code:
NEC 705.12.B.2.3.c

NOMINAL ESS VOLTAGE: 120/240V
MAX AVAILABLE SHORT-CIRCUIT FROM ESS: 32A
ARC FAULT CLEARING TIME FROM ESS: 67ms
DATE OF CALCULATION:

Label Location:
(MP)
Per Code:
Per 706.7(D) label to be marked in field

(AC): AC Disconnect
(BLC): Backup Load Center
(MP): Main Panel

Label Set

POWERWALL

Tesla Powerwall is a fully-integrated AC battery system for residential or light commercial use. Its rechargeable lithium-ion battery pack provides energy storage for solar self-consumption, time-based control, and backup.

Powerwall's electrical interface provides a simple connection to any home or building. Its revolutionary compact design achieves market-leading energy density and is easy to install, enabling owners to quickly realize the benefits of reliable, clean power.

PERFORMANCE SPECIFICATIONS

AC Voltage (Nominal)	120/240 V
Feed-In Type	Split Phase
Grid Frequency	60 Hz
Total Energy[1]	14 kWh
Usable Energy[1]	13.5 kWh
Real Power, max continuous[2]	5 kW (charge and discharge)
Real Power, peak (10 s, off-grid/backup)[2]	7 kW (charge and discharge)
Apparent Power, max continuous	5.8 kVA (charge and discharge)
Apparent Power, peak (10 s, off-grid/backup)	7.2 kVA (charge and discharge)
Maximum Supply Fault Current	10 kA
Maximum Output Fault Current	32 A
Overcurrent Protection Device	30 A
Imbalance for Split-Phase Loads	100%
Power Factor Output Range	+/– 1.0 adjustable
Power Factor Range (full-rated power)	+/– 0.85
Internal Battery DC Voltage	50 V
Round Trip Efficiency[1,3]	90%
Warranty	10 years

[1] Values provided for 25°C (77°F), 3.3 kW charge/discharge power.
[2] In Backup mode, grid charge power is limited to 3.3 kW.
[3] AC to battery to AC, at beginning of life.

COMPLIANCE INFORMATION

Certifications	UL 1642, UL 1741, UL 1973, UL 9540, IEEE 1547, UN 38.3
Grid Connection	Worldwide Compatibility
Emissions	FCC Part 15 Class B, ICES 003
Environmental	RoHS Directive 2011/65/EU
Seismic	AC156, IEEE 693-2005 (high)

MECHANICAL SPECIFICATIONS

Dimensions[1]	1150 mm x 753 mm x 147 mm (45.3 in x 29.6 in x 5.75 in)
Weight[1]	114 kg (251.3 lbs)
Mounting options	Floor or wall mount

[1] Dimensions and weight differ slightly if manufactured before March 2019. Contact Tesla for additional information.

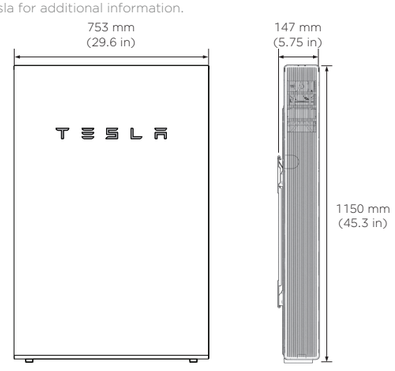

ENVIRONMENTAL SPECIFICATIONS

Operating Temperature	–20°C to 50°C (–4°F to 122°F)
Recommended Temperature	0°C to 30°C (32°F to 86°F)
Operating Humidity (RH)	Up to 100%, condensing
Storage Conditions	–20°C to 30°C (–4°F to 86°F) Up to 95% RH, non-condensing State of Energy (SoE): 25% initial
Maximum Elevation	3000 m (9843 ft)
Environment	Indoor and outdoor rated
Enclosure Type	NEMA 3R
Ingress Rating	IP67 (Battery & Power Electronics) IP56 (Wiring Compartment)
Wet Location Rating	Yes
Noise Level @ 1m	< 40 dBA at 30°C (86°F)

TYPICAL SYSTEM LAYOUTS

WHOLE HOME BACKUP

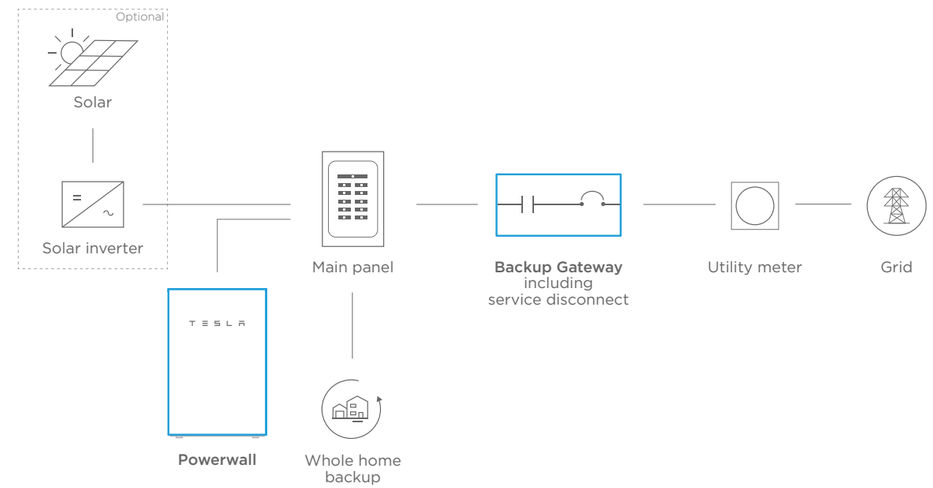

PARTIAL HOME BACKUP

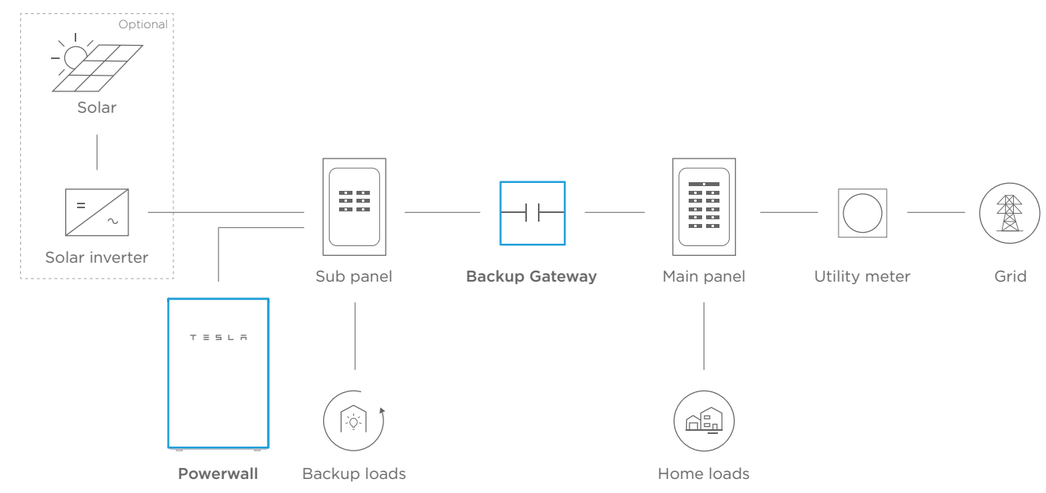

POWERWALL
Backup Gateway 2

The Backup Gateway 2 for Tesla Powerwall provides energy management and monitoring for solar self-consumption, time-based control, and backup.

The Backup Gateway 2 controls connection to the grid, automatically detecting outages and providing a seamless transition to backup power. When equipped with a main circuit breaker, the Backup Gateway 2 can be installed at the service entrance. When the optional internal panelboard is installed, the Backup Gateway 2 can also function as a load center.

The Backup Gateway 2 communicates directly with Powerwall, allowing you to monitor energy use and manage backup energy reserves from any mobile device with the Tesla app.

PERFORMANCE SPECIFICATIONS

AC Voltage (Nominal)	120/240V
Feed-In Type	Split Phase
Grid Frequency	60 Hz
Current Rating	200 A
Maximum Input Short Circuit Current	10 kA[1]
Overcurrent Protection Device	100-200A; Service Entrance Rated[1]
Overvoltage Category	Category IV
AC Meter	Revenue accurate (+/– 0.2 %)
Primary Connectivity	Ethernet, Wi-Fi
Secondary Connectivity	Cellular (3G, LTE/4G)[2]
User Interface	Tesla App
Operating Modes	Support for solar self-consumption, time-based control, backup, and off-grid
Backup Transition	Automatic disconnect for seamless backup
Modularity	Supports up to 10 AC-coupled Powerwalls
Optional Internal Panelboard	200A 6-space / 12 circuit Eaton BR Circuit Breakers
Warranty	10 years

[1] When protected by Class J fuses, Backup Gateway 2 is suitable for use in circuits capable of delivering not more than 22kA symmetrical amperes.
[2] The customer is expected to provide internet connectivity for Backup Gateway 2; cellular should not be used as the primary mode of connectivity. Cellular connectivity subject to network operator service coverage and signal strength.

MECHANICAL SPECIFICATIONS

Dimensions	660 mm x 411 mm x 149 mm (26 in x 16 in x 6 in)
Weight	20.4 kg (45 lb)
Mounting options	Wall mount, Semi-flush mount

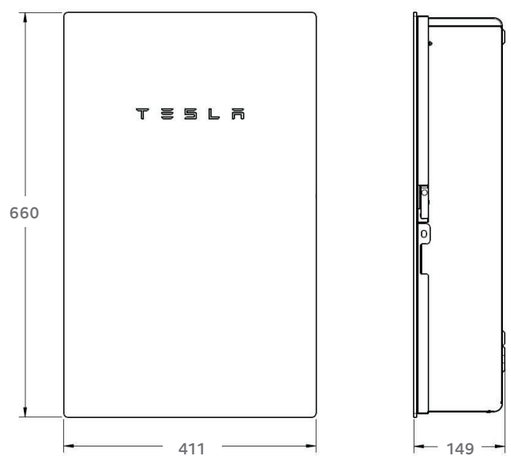

COMPLIANCE INFORMATION

Certifications	UL 67, UL 869A, UL 916, UL 1741 PCS CSA 22.2 0.19, CSA 22.2 205
Emissions	FCC Part 15, ICES 003

ENVIRONMENTAL SPECIFICATIONS

Operating Temperature	–20°C to 50°C (–4°F to 122°F)
Operating Humidity (RH)	Up to 100%, condensing
Maximum Elevation	3000 m (9843 ft)
Environment	Indoor and outdoor rated
Enclosure Type	NEMA 3R

powered by Q.ANTUM DUO

Q.PEAK DUO BLK-G6+ / SC

330-345

ENDURING HIGH PERFORMANCE

ZEP COMPATIBLE

EUPD RESEARCH TOP BRAND PV MODULES EUROPE 2019

Q CELLS YIELD SECURITY
- ANTI PID TECHNOLOGY (APT)
- HOT-SPOT PROTECT (HSP)
- TRACEABLE QUALITY (TRA.Q™)
- ANTI LID TECHNOLOGY (ALT)

25 YEAR Product and Performance Warranty Q CELLS

Q.ANTUM TECHNOLOGY: LOW LEVELIZED COST OF ELECTRICITY
Higher yield per surface area, lower BOS costs, higher power classes, and an efficiency rate of up to 19.5%.

INNOVATIVE ALL-WEATHER TECHNOLOGY
Optimal yields, whatever the weather with excellent low-light and temperature behavior.

ENDURING HIGH PERFORMANCE
Long-term yield security with Anti LID and Anti PID Technology[1], Hot-Spot Protect and Traceable Quality Tra.Q™.

ZEP COMPATIBLE™ FRAME DESIGN
High-tech black Zep Compatible™ frame, for improved aesthetics, easy installation and increased safety.

A RELIABLE INVESTMENT
Inclusive 25-year product warranty and 25-year linear performance warranty[2].

STATE OF THE ART MODULE TECHNOLOGY
Q.ANTUM DUO combines cutting edge cell separation and innovative wiring with Q.ANTUM Technology.

[1] APT test conditions according to IEC/TS 62804-1:2015, method B (−1500 V, 168 h)
[2] See data sheet on rear for further information

THE IDEAL SOLUTION FOR:

Rooftop arrays on commercial and industrial buildings

Engineered in Germany

Q CELLS

MECHANICAL SPECIFICATION

Format	68.5 × 40.6 × 1.57 in (including frame) (1740 × 1030 × 40 mm)
Weight	47.4 lbs (21.5 kg)
Front Cover	0.13 in (3.2 mm) thermally pre-stressed glass with anti-reflection technology
Back Cover	Composite film
Frame	Black anodized aluminum
Cell	6 × 20 monocrystalline Q.ANTUM solar half cells
Junction Box	2.09-3.98 × 1.26-2.36 × 0.59-0.71 in (53-101 × 32-60 × 15-18 mm), Protection class IP67, with bypass diodes
Cable	4 mm² Solar cable; (+) ≥43.3 in (1100 mm), (−) ≥43.3 in (1100 mm)
Connector	Stäubli MC4; IP68

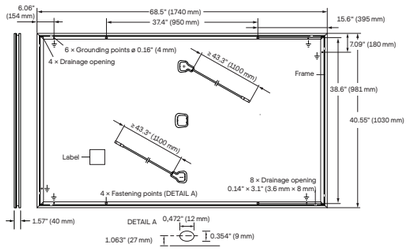

ELECTRICAL CHARACTERISTICS

POWER CLASS				330	335	340	345
MINIMUM PERFORMANCE AT STANDARD TEST CONDITIONS, STC[1] (POWER TOLERANCE +5 W / −0 W)							
Minimum	Power at MPP[1]	P_{MPP}	[W]	330	335	340	345
	Short Circuit Current[1]	I_{SC}	[A]	10.41	10.47	10.52	10.58
	Open Circuit Voltage[1]	V_{OC}	[V]	40.15	40.41	40.66	40.92
	Current at MPP	I_{MPP}	[A]	9.91	9.97	10.02	10.07
	Voltage at MPP	V_{MPP}	[V]	33.29	33.62	33.94	34.25
	Efficiency[1]	η	[%]	≥18.4	≥18.7	≥19.0	≥19.3
MINIMUM PERFORMANCE AT NORMAL OPERATING CONDITIONS, NMOT[2]							
Minimum	Power at MPP	P_{MPP}	[W]	247.0	250.7	254.5	258.2
	Short Circuit Current	I_{SC}	[A]	8.39	8.43	8.48	8.52
	Open Circuit Voltage	V_{OC}	[V]	37.86	38.10	38.34	38.59
	Current at MPP	I_{MPP}	[A]	7.80	7.84	7.89	7.93
	Voltage at MPP	V_{MPP}	[V]	31.66	31.97	32.27	32.57

[1] Measurement tolerances P_{MPP} ±3%; I_{SC}; V_{OC} ±5% at STC: 1000 W/m², 25±2 °C, AM 1.5 according to IEC 60904-3 • [2] 800 W/m², NMOT, spectrum AM 1.5

Q CELLS PERFORMANCE WARRANTY

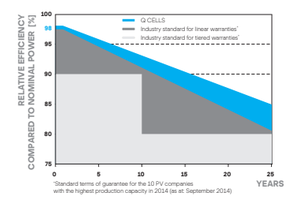

At least 98% of nominal power during first year. Thereafter max. 0.54% degradation per year. At least 93.1% of nominal power up to 10 years. At least 85% of nominal power up to 25 years.

All data within measurement tolerances. Full warranties in accordance with the warranty terms of the Q CELLS sales organization of your respective country.

PERFORMANCE AT LOW IRRADIANCE

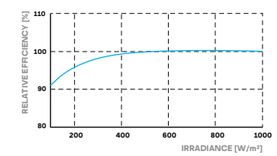

Typical module performance under low irradiance conditions in comparison to STC conditions (25 °C, 1000 W/m²)

TEMPERATURE COEFFICIENTS							
Temperature Coefficient of I_{SC}	α	[%/K]	+0.04	Temperature Coefficient of V_{OC}	β	[%/K]	−0.27
Temperature Coefficient of P_{MPP}	γ	[%/K]	−0.36	Normal Module Operating Temperature	NMOT	[°F]	109±5.4 (43±3 °C)

PROPERTIES FOR SYSTEM DESIGN

Maximum System Voltage V_{SYS}	[V]	1000 (IEC) / 1000 (UL)	Protection Class	II
Maximum Series Fuse Rating	[A DC]	20	Fire Rating based on ANSI / UL 1703	C (IEC) / TYPE 2 (UL)
Max. Design Load, Push / Pull (UL)[3]	[lbs / ft²]	50 (2400 Pa) / 50 (2400 Pa)	Permitted Module Temperature on Continuous Duty	−40 °F up to +185 °F (−40 °C up to +85 °C)
Max. Test Load, Push / Pull (UL)[3]	[lbs / ft²]	75 (3600 Pa) / 75 (3600 Pa)		

[3] See Installation Manual

QUALIFICATIONS AND CERTIFICATES

UL 1703, CE-compliant, IEC 61215:2016, IEC 61730:2016, Application Class II, U.S. Patent No. 9,893,215 (solar cells)

Note: Installation instructions must be followed. See the installation and operating manual or contact our technical service department for further information on approved installation and use of this product.

Hanwha Q CELLS America Inc.
400 Spectrum Center Drive, Suite 1400, Irvine, CA 92618, USA | **TEL** +1 949 748 59 96 | **EMAIL** inquiry@us.q-cells.com | **WEB** www.q-cells.us

Specifications subject to technical changes © **Q CELLS** Q.PEAK DUO BLK-G6+/SC_330-345_2019-11_Rev01_NA

SOLAR INVERTER

Tesla Solar Inverter provides DC to AC conversion and integrates with the Tesla ecosystem, including Solar Panels, Solar Roof, Powerwall, and vehicle charging, to provide a seamless sustainable energy experience.

KEY FEATURES

- Integrated rapid shutdown, arc fault, and ground fault protection
- No neutral wire simplifies installation
- 2x the standard number of MPPTs for high production on complex roofs

ELECTRICAL SPECIFICATIONS

MODEL NUMBER	1534000-xx-y	1538000-xx-y
OUTPUT (AC)	3.8 kW	7.6 kW
Nominal Power	3,800 W	7,600 W
Maximum Apparent Power	3,328 VA at 208 V 3,840 VA at 240 V	6,656 VA at 208 V 7,680 VA at 240 V
Maximum Continuous Current	16 A	32 A
Breaker (Overcurrent Protection)	20 A	40 A
Nominal Power Factor	1 - 0.85 (leading / lagging)	
THD (at Nominal Power)	<5%	
INPUT (DC)		
MPPT	2	4
Input Connectors per MPPT	1-2	1-2-1-2
Maximum Input Voltage	600 VDC	
DC Input Voltage Range	60 - 550 VDC	
DC MPPT Voltage Range[1]	60 - 480 VDC	
Maximum Current per MPPT (I_{mp})	11 A	
Maximum Short Circuit Current per MPPT (I_{sc})	15 A	

PERFORMANCE SPECIFICATIONS

Peak Efficiency[2]	97.5%	98.0%
CEC Efficiency[2]	97.5%	
Allowable DC/AC Ratio	1.4	
Customer Interface	Tesla Mobile App	
Internet Connectivity	Wi-Fi (2.4 GHz, 802.11 b/g/n), Ethernet, Cellular (LTE/4G)[3]	
AC Remote Metering Support	Wi-Fi (2.4 GHz, 802.11 b/g/n), RS-485	
Protections	Integrated arc fault circuit interrupter (AFCI), Rapid Shutdown	
Supported Grid Types	60 Hz, 240 V Split Phase 60 Hz, 208 V Wye	
Required Number of Tesla Solar Shutdown Devices per Solar Module	See *Solar Shutdown Device Requirements per Module* on page 3	
Warranty	12.5 years	

[1] Maximum current.
[2] Expected efficiency pending final CEC listing.
[3] Cellular connectivity subject to network operator service coverage and signal strength.

MECHANICAL SPECIFICATIONS

Dimensions	660 mm x 411 mm x 158 mm (26 in x 16 in x 6 in)
Weight	52 lb[4]
Mounting options	Wall mount (bracket)

[4] Door and bracket can be removed for a mounting weight of 37 lb.

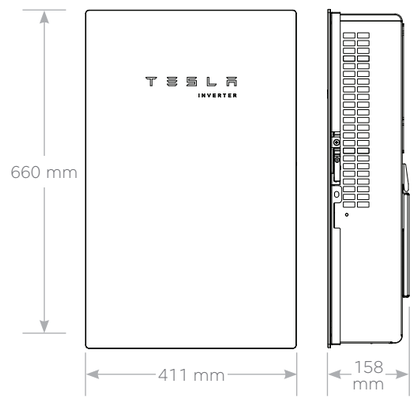

ENVIRONMENTAL SPECIFICATIONS

Operating Temperature[5]	-30°C to 45°C (-22°F to 113°F)
Operating Humidity (RH)	Up to 100%, condensing
Storage Temperature	-30°C to 70°C (-22°F to 158°F)
Maximum Elevation	3000 m (9843 ft)
Environment	Indoor and outdoor rated
Enclosure Rating	Type 3R
Ingress Rating	IP55 (Wiring compartment)
Pollution Rating	PD2 for power electronics and terminal wiring compartment, PD3 for all other components
Operating Noise @ 1 m	< 40 db(A) nominal, < 50 db(A) maximum

[5] For the 7.6 kW Solar Inverter, performance may be de-rated to 6.2 kW at 240 V or 5.37 kW at 208 V when operating at temperatures greater than 45°C.

COMPLIANCE INFORMATION

Grid Certifications	UL 1741, UL 1741 SA, IEEE 1547, IEEE 1547.1
Safety Certifications	UL 1699B, UL 1741, UL 1998 (US)
Emissions	EN 61000-6-3 (Residential), FCC 47CFR15.109 (a)

SOLAR SHUTDOWN DEVICE

The Tesla Solar Shutdown Device is part of the PV system rapid shutdown (RSD) function in accordance with Article 690 of the applicable NEC. When paired with the Tesla Solar Inverter, the PVRSS is initiated by any loss of AC power.

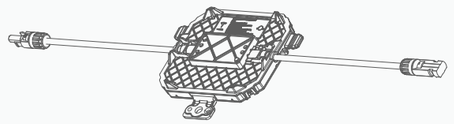

ELECTRICAL SPECIFICATIONS

Nominal Input DC Current Rating (I_{MP})	12 A
Maximum Input Short Circuit Current (I_{SC})	15 A
Maximum System Voltage	600 V DC

RSD MODULE PERFORMANCE

Maximum Number of Devices per String	5
Control	Power Line Excitation
Passive State	Normally open
Maximum Power Consumption	7 W
Warranty	25 years

COMPLIANCE INFORMATION

Certifications	UL 1741 PVRSS PVRSA (Photovoltaic Rapid Shutdown Array)

PVRSS

RSD Initiation Method	Loss of AC power
Compatible Equipment	Tesla Solar Inverter

ENVIRONMENTAL SPECIFICATIONS

Ambient Temperature	-40°C to 50°C (-40°F to 122°F)
Storage Temperature	-30°C to 70°C (-22°F to 158°F)
Enclosure Rating	NEMA 4 / IP65

MECHANICAL SPECIFICATIONS

Electrical Connections	MC4 Connector
Housing	Plastic
Dimensions	125 mm x 150 mm x 22 mm (5 in x 6 in x 1 in)
Weight	350 g (0.77 lb)
Mounting Options	ZEP Home Run Clip M4 Screw (#10) M8 Bolt (5/16") Nail / Wood screw

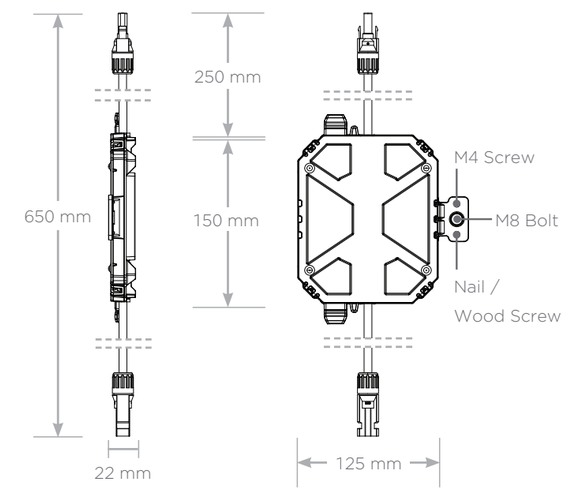

SOLAR SHUTDOWN DEVICE REQUIREMENTS PER MODULE

The following modules have been certified as part of a PV Rapid Shutdown Array (PVRSA) when installed together with the Tesla Solar Inverter and Tesla Solar Shutdown Devices. See the Tesla Solar Inverter Installation Manual for guidance on installing Tesla Solar Inverter and Solar Shutdown Devices with other modules.

Brand	Model	Required Solar Shutdown Devices
Tesla	Solar Roof V3	1 Solar Shutdown Device per 10 modules
Hanwha	Q.PEAK DUO BLK-G5	1 Solar Shutdown Device per 3 modules
Hanwha	Q.PEAK DUO BLK-G6+	1 Solar Shutdown Device per 3 modules

Wire & Conduit Size Equivalence Table: Copper & Aluminum					
Rating (A)	**Copper**			**Aluminum**	
	Conductor (AWG or kcmil)	**Min. EGC (AWG)**	**Conduit**	**Conductor (AWG or kcmil)**	**Conduit**
100	3	8	1" - EMT	1	1-1/4" - EMT
115	2	6	1-1/4" - EMT	1/0	2" - PVC
130	1	6	1-1/4" - EMT	2/0	2" - PVC
150	1/0	6	2" - PVC	3/0	2" - PVC
175	2/0	6	2" - PVC	4/0	2" - PVC
200	3/0	6	2" - PVC	250	2" - PVC

NEC Code references

NEC Table 310.15(B)(16) (formerly Table 310.16)

NEC Table 250.122

Table 310.104(A)

CONFIDENTIAL – THE INFORMATION HEREIN CONTAINED SHALL NOT BE USED FOR THE BENEFIT OF ANYONE EXCEPT TESLA INC., NOR SHALL IT BE DISCLOSED IN WHOLE OR IN PART TO OTHERS OUTSIDE THE RECIPIENT'S ORGANIZATION, EXCEPT IN CONNECTION WITH THE SALE AND USE OF THE RESPECTIVE TESLA EQUIPMENT, WITHOUT THE WRITTEN PERMISSION OF TESLA INC.

TESLA

ZS Comp

for composition shingle roofs

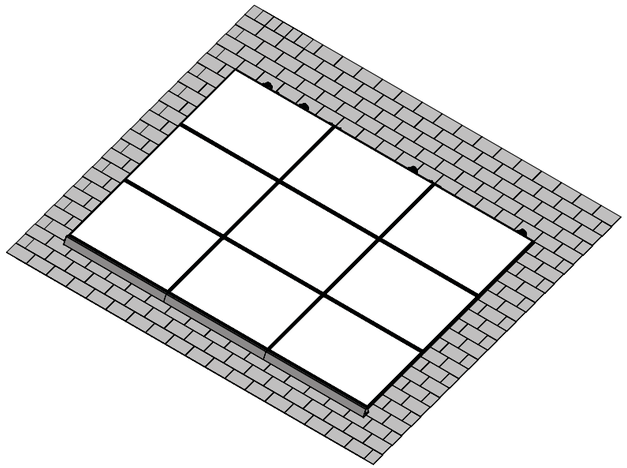

Description

- PV mounting solution for composition shingle roofs
- Works with all Zep Compatible Modules
- Auto bonding UL-listed hardware creates structural and electrical bond
- ZS Comp has a UL 1703 Class “A” Fire Rating when installed using modules from any manufacturer certified as “Type 1” or “Type 2”

Specifications

- Designed for pitched roofs
- Installs in portrait and landscape orientations
- ZS Comp supports module wind uplift and snow load pressures to 50 psf per UL 2703
- Wind tunnel report to ASCE 7-05 and 7-10 standards
- ZS Comp grounding products are UL listed to UL 2703 and UL 467
- ZS Comp bonding products are UL listed to UL 2703
- Engineered for spans up to 72” and cantilevers up to 24”
- Zep wire management products listed to UL 1565 for wire positioning devices

zepsolar.com

This document does not create any express warranty by Zep Solar or about its products or services. Zep Solar’s sole warranty is contained in the written product warranty for each product. The end-user documentation shipped with Zep Solar’s products constitutes the sole specifications referred to in the product warranty. The customer is solely responsible for verifying the suitability of ZepSolar’s products for each use. Specifications are subject to change without notice. Patents and Apps: zspats.com.

SolarCity | Zep Solar
Next-Level PV Mounting Technology

Components

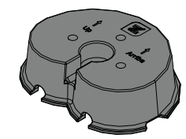

Mounting Block

Part No. 850-1633
Listed to UL 2703

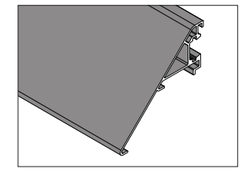

Array Skirt

Part No. 850-1608 or 500-0113
Listed to UL 2703

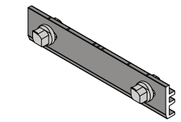

Interlock

Part No. 850-1388 or 850-1613
Listed to UL 2703

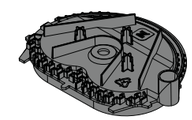

Flashing Insert

Part No. 850-1628
Listed to UL 2703

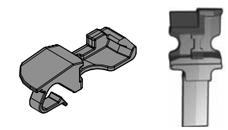

Grip

Part No. 850-1606 or 850-1421
Listed to UL 2703

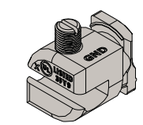

Ground Zep V2

Part No. 850-1511
Listed to UL 467 and UL 2703

Captured Washer Lag

Part No. 850-1631-001
850-1631-002
850-1631-003
850-1631-004

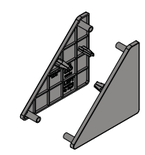

End Cap

Part No.
(L) 850-1586 or 850-1460
(R) 850-1588 or 850-1467

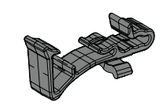

DC Wire Clip

Part No. 850-1509
Listed to UL 1565

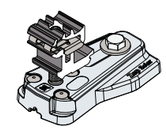

Leveling Foot

Part No. 850-1397
Listed to UL 2703

zepsolar.com

This document does not create any express warranty by Zep Solar or about its products or services. Zep Solar's sole warranty is contained in the written product warranty for each product. The end-user documentation shipped with Zep Solar’s products constitutes the sole specifications referred to in the product warranty. The customer is solely responsible for verifying the suitability of ZepSolar’s products for each use. Specifications are subject to change without notice. Patents and Apps: zspats.com.

Document # 800-1839-001 Rev D
Date last exported: April 29, 2016 11:22 AM