McC | Architecture pllc

21 June 2021

Building Inspector
Village of Irvington
85 Main St.
Irvington, NY 10533

RE: Application# 429
Review comments dated 5/12/2021

Dear Mr. Marron:

As per your comments, we have revised the drawings to include the following:

- Added 2020 Residential Code information on SPC-1.
- Added 2020 Energy Conservation Code compliance information on new drawing, SPC-2, as well as additional information on the Cover Sheet.
- Added construction type and occupancy classification on Cover Sheet.
- Added compliance statement to each sheet, adjacent to professional stamp.
- Added range hood CFM (600) to electrical plan and provided specification

In addition, we are confirming that the existing sliding doors do not have divided lites. Fieldpoint has reviewed and approved the change.

Included in this submission we have provided copies of the window proposal.

Finally, the Contractor will be providing his business, licensing and insurance information separately.

This project requires ARB approval. Please put us on the agenda for the next meeting.

We have included a check for $50 as required for the Revision Fee.

Please let us know if you have any additional questions or comments.

Sincerely,

Douglas McClure
President

dm/DM

25 North Dutcher Street | Irvington, New York 10533 914.297.8622 dmcclure@mcc-architecture.com

KBS
KITCHEN & BATH SOURCE™
50 Virginia Road, White Plains, NY 10603 P. (914)946-8600 F. (914)946-8602
kbskitchen.com

October 29, 2020
Judy Frimer
97 Highgate Lane
Irvington, NY 10533

REMODELING AGREEMENT

Kitchen and dining area:

1. Remove kitchen cabinetry
2. Disconnect all appliances and plumbing (appliances should be removed from premise by appliance company for recycling)
3. Remove return wall (kitchen entrance)
4. Frame to enlarge opening between kitchen and living room per KBS plans
5. Remove wall between kitchen and dining room
6. Install flush header to make ceiling level between kitchen and dining room
7. Supply and install wonder board in kitchen and dining room to receive tile
8. Install customer supplied tile and grout in dining room and kitchen
9. Supply and install 7 LED recess lights in kitchen ceiling on dimmer
10. Supply and install under cabinet lights
11. Install 2 owner supplied pendant lights over island on dimmer
12. Install owner supplied chandelier over table on dimmer
13. Relocate electric from wall removal
14. Install and relocate electric to receive appliances per KBS plans
15. Install backsplash outlets as per building code
16. Bring in gas for range
17. Relocate water line for refrigerator
18. Sheetrock, patch and tape 3 coats
19. Install KBS supplied cabinets as per plan purchases separately on KBS plans
20. Install owner supplied tile and grout on backsplash area
21. Hook up faucet and all appliances
22. Supply and install base molding
23. Replace trim on 5 doors in foyer

$60,100 X_____
initial to purchase

See Sales Receipt
for Special Pricing
(B2)

Windows and doors:

A. Replace 4 owner supplied windows in same opening
B. Replace 2 owner supplied sliding doors in same opening
C. Patch interior and exterior

$9,000 X_____
initial to purchase

TOTAL $ $69,100

BC See Sales Receipt For Special Pricing

Pricing is good for 30 days. Does not include engineer drawings for wall removal or Home Improvement permit or fees. Customer is responsible to file job. (KBS will assist in the process) Trade work like electrical and plumbing will file permits and fees are included in pricing.

Remodeling Labor Agreement terms (if purchased by customer must be initialed on contract & signed below)

1R. Kitchen & Bath Source, LLC. agrees to furnish labor as specified in the attached Remodeling Agreement for the above referenced customer.

2R. The signed Remodeling Agreement will be considered part of the Contract and terms of the KBS Contract apply unless exceptions are noted within the Remodeling agreement.

3R. KBS will provide building materials like lumber, sheetrock, adhesives, fasteners, tape and compound to complete the labor items.

4R. Remodeling agreement items include basic building materials. All fixtures and any other special materials will be billed separately or supplied by the customer as needed and noted in the agreement.

5R. Only the work outlined and paid for in the remodeling agreement is included. Structural work, roofing, exterior work, heating, ventilation, and air conditioning, painting and decorative work is not included unless noted otherwise.

6R. KBS will perform all work in a professional and timely manner. All workmanship is warrantied for 3 years.

7R. Customer must give KBS full access to the job site when needed, for work to be completed under this agreement.

8R. Debris removed or created by KBS will be removed from the jobsite or placed in a customer supplied container or dumpster as specified in the Remodeling agreement.
Customer is responsible for the container and its contents. (Appliances removed by appliance company for recycling purposes)

Model Number: JDH236/C3

Special Notes: LED lights. This model is not available with heat lamps.

WIDTH:	36"
DEPTH:	24"
HEIGHT:	30"
CFM:	600
SONES:	6.5
AMPS:	4.0
# LIGHTS:	2

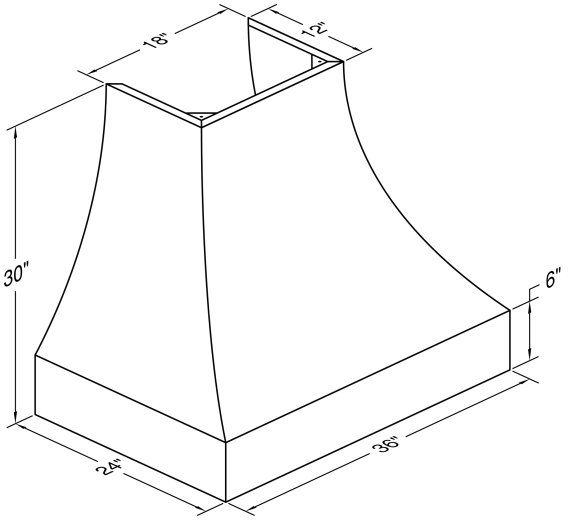

CONNECTION DIAGRAM

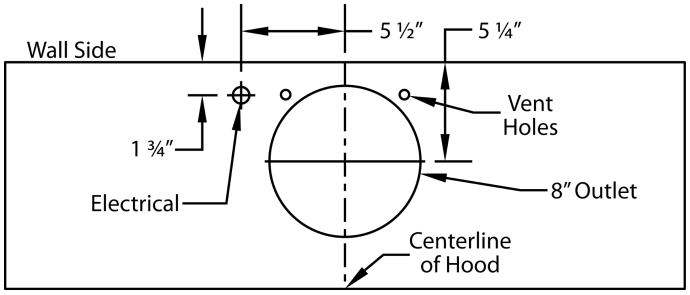

600 CFM B200 Dual Blower (Top View)

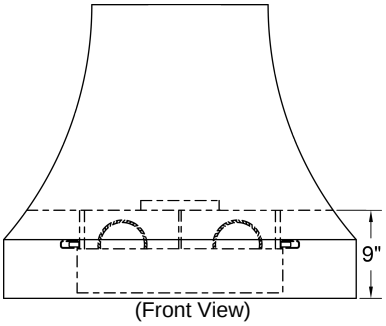

(Front View)

REC. MOUNTING HEIGHT*

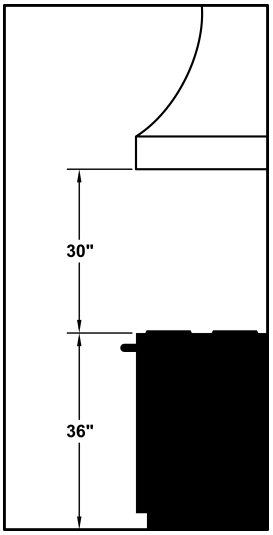

* Exceeding recommended mounting height may compromise performance.

ELECTRICAL/MECHANICAL SPECIFICATIONS FOR BLOWER UNIT

MODEL	VOLTS	AMPS+	HZ	RPM	CFM SP@0.0"	EQUIV CFM$	CFM SP@0.1"	CFM SP@0.2"	CFM SP@0.3"	MIN. ROUND DUCT SIZE	SONES#
B200 Dual	115	4.0	60	1550	600	900	531	480	430	8" (50 sq. in.)	6.5

+ This model is equipped with LED lighting: (2 lights: 30" - 41", 3 lights: 42" - 53", 4 lights: 54" - 66").

$ Because the Magic Lung blower uses centrifugal filtration rather than conventional baffle or mesh filters, the Magic Lung blower can handle cooking equipment with higher cubic feet per minute (CFM) requirements and can deliver equivalent CFM much more efficiently than other filtration systems. When comparing the Magic Lung with other blower units made by other manufacturers, use the "Equivalent CFM".

Ratings in accordance with the Standard Test Code by the Energy Systems Laboratory of the Texas Engineering Experiment Station.

Revised 4/18/21

FRIMER
GLIDERS & DOORS

MIKE FREIMAN
JILCO WINDOW CORP
135 MAHOPAC AVE
GRANITE SPRINGS, NY 10527-1127
Phone: (914) 248-6100

Email: mfreiman@jilcowindow.com

Quote #: JBKU86E

A Proposal for Window and Door Products prepared for:
Shipping Address:
JILCO WINDOW CORP
135 Mahopac Ave
Granite Springs, NY 10527-1127

This report was generated on 4/18/2021 7:30:20 PM using the Marvin Order Management System, version 0003.07.00 (Current). Price in USD. Unit availability and price are subject to change. Dealer terms and conditions may apply.

Featuring products from:

MARVIN

LINE ITEM QUOTES

The following is a schedule of the windows and doors for this project. For additional unit details, please see Line Item Quotes. Additional charges, tax or Terms and Conditions may apply. Detail pricing is per unit.

Line #1 Qty: 2	Mark Unit: KITCHEN	Net Price: Ext. Net Price:	 USD	891.81 1,783.62

MARVIN

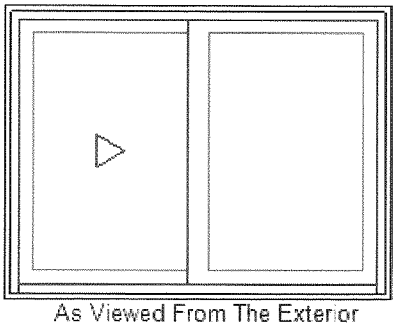

As Viewed From The Exterior

Entered As: FS
RO 47 1/2" X 35 1/2"

Bronze Clad Exterior
Primed Pine Interior 32.36
Ultimate Glider - XO - Left Hand 800.47
Frame Size 46 1/2" X 35"
Rough Opening 47 1/2" X 35 1/2"
Left Sash
Bronze Clad Sash Exterior
Primed Pine Sash Interior
IG - 3/4" - 1 Lite
Low E2 w/Argon
Black Perimeter Bar
Square Interior Glazing Profile 29.49
Standard Bottom Rail
Right Sash
Bronze Clad Sash Exterior
Primed Pine Sash Interior
IG - 3/4" - 1 Lite
Low E2 w/Argon
Black Perimeter Bar
Square Interior Glazing Profile 29.49
Standard Bottom Rail
Black Weather Strip
Beige Sill Track
White Folding Handle
Active Sash Screen
Bronze Surround
Charcoal Fiberglass Mesh
4 9/16' Jambs
Nailing Fin
***Note: Unit Availability and Price is Subject to Change

Line #2 Qty: 1	Mark Unit: KITCHEN	Net Price: Ext. Net Price:	 USD	1,265.07 1,265.07

MARVIN

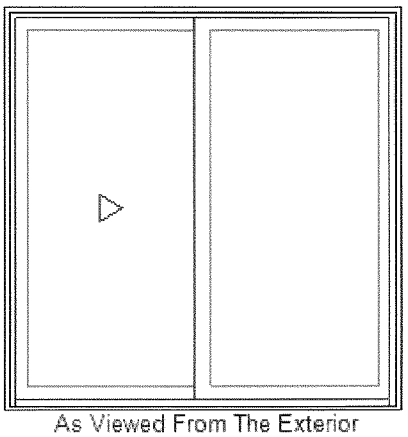

As Viewed From The Exterior

Entered As: FS

Bronze Clad Exterior
Primed Pine Interior 32.36
Ultimate Glider - XO - Left Hand 1,173.73
Frame Size 58 1/2" X 59"
Rough Opening 59 1/2" X 59 1/2"
Left Sash
Bronze Clad Sash Exterior
Primed Pine Sash Interior
IG - 3/4" - 1 Lite
Low E2 w/Argon
Black Perimeter Bar
Square Interior Glazing Profile 29.49
Standard Bottom Rail
Right Sash
Bronze Clad Sash Exterior
Primed Pine Sash Interior
IG - 3/4" - 1 Lite
Low E2 w/Argon
Black Perimeter Bar
Square Interior Glazing Profile 29.49

RO 59 1/2" X 59 1/2"

Standard Bottom Rail
Black Weather Strip
Beige Sill Track
White Folding Handle
Active Sash Screen
Bronze Surround
Charcoal Fiberglass Mesh
4 9/16" Jambs
Nailing Fin
***Note: Unit Availability and Price is Subject to Change

Line #3 Qty: 1	Mark Unit: FAMILY ROOM	Net Price: Ext. Net Price:	 USD	1,112.60 1,112.60

MARVIN

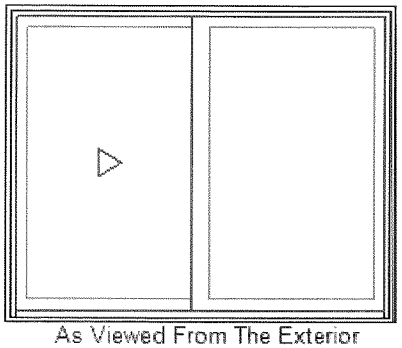

As Viewed From The Exterior

Entered As: FS
RO 59 1/2" X 47 1/2"

Bronze Clad Exterior
Primed Pine Interior 32.36
Ultimate Glider - XO - Left Hand 1,021.26
Frame Size 58 1/2" X 47"
Rough Opening 59 1/2" X 47 1/2"
Left Sash
Bronze Clad Sash Exterior
Primed Pine Sash Interior
IG - 3/4" - 1 Lite
Low E2 w/Argon
Black Perimeter Bar
Square Interior Glazing Profile 29.49
Standard Bottom Rail
Right Sash
Bronze Clad Sash Exterior
Primed Pine Sash Interior
IG - 3/4" - 1 Lite
Low E2 w/Argon
Black Perimeter Bar
Square Interior Glazing Profile 29.49
Standard Bottom Rail
Black Weather Strip
Beige Sill Track
White Folding Handle
Active Sash Screen
Bronze Surround
Charcoal Fiberglass Mesh
4 9/16" Jambs
Nailing Fin
***Note: Unit Availability and Price is Subject to Change

Line #4 Qty: 1	Mark Unit: SIGNATURE 6' DOOR	Net Price: Ext. Net Price:	 USD	3,811.05 3,811.05

MARVIN

Stone White Clad Exterior
Primed Pine Interior 87.74
Ultimate Sliding French Door - XO 2,256.85
CN 60R66R
Rough Opening 72" X 80"
Left Panel
Stone White Clad Sash Exterior
Primed Pine Sash Interior
IG
Tempered Low E2 w/Argon
Black Perimeter and Spacer Bar
Square 7/8" SDL - With Spacer Bar - Black 431.52
Rectangular - Standard Cut 3W5H
Stone White Clad Ext - Primed Pine Int
Square Interior Glazing Profile 29.49

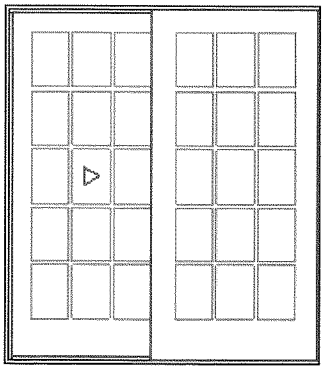

As Viewed From The Exterior

Entered As: CN
CN 60R66R
RO 72" X 80"

Right Panel
Stone White Clad Sash Exterior
Primed Pine Sash Interior
IG
Tempered Low E2 w/Argon
Black Perimeter and Spacer Bar
Square 7/8" SDL - With Spacer Bar - Black 431.52
Rectangular - Standard Cut 3W5H
Stone White Clad Ext - Primed Pine Int
Square Interior Glazing Profile 29.49
Traditional Handle(s)
3 Point Multi-Point Lock on Active Panel 79.83
Brass PVD Active Exterior Handle Set on Active Panel Non-Keyed 262.51
Brass PVD Active Interior Handle Set on Active Panel
Exterior Standard Sliding Screen 202.10
Stone White Surround
Charcoal Fiberglass Mesh
***Screen/Combo Ship Loose
Std Ultrex Sill
Beige Ultrex Sill
Beige Weather Strip
Bare Oak Sill Liner
Wood Sill Liners will not have an interior pre finish.
4 9/16" Jambs
Nailing Fin
***Note: Unit Availability and Price is Subject to Change

Line #5 Qty: 1	Mark Unit: SIGNATURE 8' DOOR	Net Price: Ext. Net Price:	 USD	4,615.11 4,615.11

MARVIN

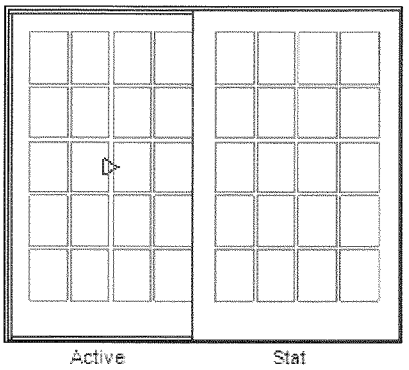

As Viewed From The Exterior

Entered As: CN
CN 80R66R
RO 96" X 80"

Stone White Clad Exterior
Primed Pine Interior 87.74
Ultimate Sliding French Door - XO 2,834.37
CN 80R66R
Rough Opening 96" X 80"
Left Panel
Stone White Clad Sash Exterior
Primed Pine Sash Interior
IG
Tempered Low E2 w/Argon
Black Perimeter and Spacer Bar
Square 7/8" SDL - With Spacer Bar - Black 575.36
Rectangular - Standard Cut 4W5H
Stone White Clad Ext - Primed Pine Int
Square Interior Glazing Profile 29.49
Right Panel
Stone White Clad Sash Exterior
Primed Pine Sash Interior
IG
Tempered Low E2 w/Argon
Black Perimeter and Spacer Bar
Square 7/8" SDL - With Spacer Bar - Black 575.36
Rectangular - Standard Cut 4W5H
Stone White Clad Ext - Primed Pine Int
Square Interior Glazing Profile 29.49
Traditional Handle(s)
2 Point Multi-Point Lock on Active Panel
Brass PVD Active Exterior Handle Set on Active Panel Non-Keyed 262.51
Brass PVD Active Interior Handle Set on Active Panel
Exterior Standard Sliding Screen 220.79
Stone White Surround
Charcoal Fiberglass Mesh
***Screen/Combo Ship Loose
Std Ultrex Sill
Beige Ultrex Sill
Beige Weather Strip

Bare Oak Sill Liner
Wood Sill Liners will not have an interior pre finish.
4 9/16" Jambs
Nailing Fin
***Note: Unit Availability and Price is Subject to Change

Line #6 Qty: 1	Mark Unit: 6' SCREEN	Net Price: Ext. Net Price:	 USD	202.10 202.10

MARVIN

Entered As: CN
CN 60R66R
RO 72" X 80"

Configured Part: Exterior Standard Sliding Screen for:
Ultimate Sliding French Door - OX
CN 60R66R
Rough Opening 72" X 80"
Exterior Standard Sliding Screen 202.10
Stone White Surround
Charcoal Fiberglass Mesh
***Note: Unit Availability and Price is Subject to Change

Line #7 Qty: 1	Mark Unit: 8' PATIO SCREEN	Net Price: Ext. Net Price:	 USD	220.79 220.79

MARVIN

Entered As: CN
CN 80R66R
RO 96" X 80"

Configured Part: Exterior Standard Sliding Screen for:
Ultimate Sliding French Door - OX
CN 80R66R
Rough Opening 96" X 80"
Exterior Standard Sliding Screen 220.79
Stone White Surround
Charcoal Fiberglass Mesh
***Note: Unit Availability and Price is Subject to Change

Project Subtotal Net Price: USD	13,010.34
8.375% Sales Tax: USD	1,089.62
Project Total Net Price: USD	14,099.96

McC | Architecture pllc
25 n. dutcher st., irvington, ny 10533 | mcc-architecture.com
t: 917.887.0975 | e: dmcclure@mcc-architecture.com

ALT LEVEL NO 2
SCOPE: KITCHEN RENOVATION AND REPLACEMENT OF ROUR (4) WINDOWS AND TWO (2) SLIDING DOORS.

CONSTRUCTION TYPE 5B UNPROTECTED(EXIST AND NEW)
OCCUPANCY= R3 ONE FAMILY RESIDENTIAL (NO CHANGE)

Frimer Residence

87 Highland Lane • Irvington, NY

REV. #/DATE	DESCRIPTION
1	BLDG. DEPT. CMNTS 6/21/21

BUILDINGS SHALL BE CONSTRUCTED IN ACCORDANCE WITH THE PROVISIONS OF THE 2015 IRC (2ND PRINTING)

CLIMATIC & GEOGRAPHIC DESIGN CRITERIA (CLIMATE ZONE 4A)

GROUND SNOW LOAD TEMP.REQU'D	WIND SPD	SEISMIC DSGN CATEGORY INDEX	SUBJECT DAMAGE FROM				WINTER DESIGN	ICE BARRIER UNDERLYMNT	FLOOD HAZARDS	AIR FREEZING	MEAN ANNUAL
			WTHRING TEMP.	FRST LINE DPTH	TERMITE	DECAY					
30 LBS./S.F.	115-120 MPH	C	SEVERE	42" DEEP	MODERATE TO HEAVY	SLIGHT TO MODERATE	7D	YES	FIRM COMMUNITY-PANEL MAP# 36119C0261F EFFECTIVE DATE: 9/28/2007	2000	51.6

REGISTERED ARCHITECT
DOUGLAS OLCOTT MCCLURE
EXCELSIOR
023950
STATE OF NEW YORK

TO THE BEST OF MY KNOWLEDGE BELIEF & PROFESSIONAL JUDGEMENT OF THE UNDERSIGNED, THE PLANS & SPECIFICATIONS DEPICTED ON THESE DRAWINGS ARE IN COMPLIANCE WITH THE APPLICABLE PROVISIONS OF THE NEW YORK STATE UNIFORM FIRE PREVENTION & BUILDING CODE & THE NEW YORK STATE ENERGY CONSERVATION CONSTRUCTION CODE CURRENTLY IN EFFECT

Cov

2113
2113-Set.dwg

I. ALL WORK SHALL COMPLY WITH THE 2020 NEW YORK STATE RESIDENTIAL BUILDING CODE, NOVEMBER 2019 ADDITION, THE VILLAGE OF IRVINGTON BUILDING CODE AND ALL OTHER AGENCIES HAVING JURISDICTION.

II. THE GENERAL CONTRACTOR IS TO SECURE A BUILDING PERMIT FROM THE VILLAGE OF IRVINGTON BUILDING DEPARTMENT. (ARCHITECT WILL FILE PLANS, OWNER TO PAY FOR APPLICATION FEES.) THE GENERAL CONTRACTOR IS TO PAY ALL PERMIT FEES.

III. CONTRACTOR SHALL GIVE THE OWNER A WRITTEN GUARANTEE COVERING ALL EQUIPMENT, MATERIALS AND WORKMANSHIP FOR A PERIOD OF (1) ONE YEAR FROM DATE OF FINAL ACCEPTANCE BY THE OWNER (CONFIRMED IN WRITING), AND HE SHALL, UPON NOTICE, PROMPTLY MAKE GOOD AT HIS OWN EXPENSE ALL DEFECTS IN MATERIAL AND WORKMANSHIP DURING THIS PERIOD WITHOUT ANY COST TO THE OWNER.

IV. THE CHARACTER AND SCOPE OF THE WORK ARE ILLUSTRATED BY THE DRAWINGS AND NOTES. TO INTERPRET AND EXPLAIN THE DRAWINGS, OTHER INFORMATION DEEMED NECESSARY BY THE ARCHITECT WILL BE GIVEN TO THE CONTRACTOR WHEN AND AS REQUIRED BY THE WORK, AND IT IS TO BE UNDERSTOOD THAT SAID ADDITIONAL INFORMATION OR DRAWINGS ARE TO BE OF EQUAL FORCE WITH THESE DRAWINGS.

V. FULL SIZE OR LARGE SCALE DETAILS OR DRAWINGS SHALL GOVERN OVER SMALL SCALE DRAWINGS WHICH THEY ARE INTENDED TO AMPLIFY. DETAILS OR CONDITIONS INDICATED FOR A PORTION OF THE WORK BUT NOT CARRIED OUT FULLY FOR THE OTHER PORTIONS SHALL APPLY THROUGHOUT TO ALL SIMILAR PORTIONS EXCEPT AS OTHERWISE SPECIFICALLY NOTED. DIMENSIONS SHALL BE FIGURED RATHER THAN DETERMINED BY RULE OR SCALE.

VI. THE PROJECT HAS BEEN DESIGNED AND DETAILED FOR THE SPECIFIC MATERIALS AND EQUIPMENT SPECIFIED. NO SUBSTITUTIONS SHALL BE MADE WITHOUT THE EXPRESS WRITTEN CONSENT OF THE ARCHITECT. IF THE SPECIFIED MATERIAL IS NOT AVAILABLE, THE CONTRACTOR SHALL PROPOSE AN ALTERNATE MATERIAL AND SHALL PROVIDE DRAWINGS, SAMPLES, SPECIFICATIONS, MANUFACTURER'S LITERATURE, PERFORMANCE DATA, ETC., IN ORDER THAT THE ARCHITECT CAN EVALUATE THE PROPOSED SUBSTITUTION. IF THE SUBSTITUTION AFFECTS A CORRELATED FUNCTION, ADJACENT CONSTRUCTION, OR THE WORK OF ANY OTHER CONTRACTOR OR TRADE, THE NECESSARY CHANGES AND MODIFICATION TO THE AFFECTED WORK SHALL BE ACCOMPLISHED BY THE GENERAL CONTRACTOR AT NO ADDITIONAL EXPENSE TO THE OWNER. NO REQUESTS FOR SUBSTITUTES WILL BE ENTERTAINED BY THE ARCHITECT DUE TO CONTRACTOR'S FAILURE TO ORDER MATERIALS IN A TIMELY MANNER.

VII. THE MANUFACTURER'S STANDARD SPECIFICATIONS ARE APPROVED FOR USE IN THE PROJECT AND ARE HEREBY MADE A PART OF THESE NOTES WITH THE SAME FORCE AND EFFECT AS THOUGH HEREIN WRITTEN OUT IN FULL, EXCEPT THAT WHEREVER THE DRAWINGS REQUIRE HEAVIER MEMBERS, BETTER QUALITY MATERIALS, OR ARE OTHERWISE MORE STRINGENT, THESE MORE STRINGENT REQUIREMENTS SHALL GOVERN.

VIII. THE GENERAL CONTRACTOR SHALL NOTIFY THE ARCHITECT OF ANY DISCREPANCIES, FIELD CONDITIONS OR DIMENSIONAL INCONSISTENCIES OR NEED FOR CLARIFICATION PRIOR TO OR DURING CONSTRUCTION.

IX. UNLESS OTHERWISE NOTED, ALL DIMENSIONS ARE FINISHED DIMENSIONS.

X. ARCHITECT TO VERIFY LAYOUT OF ALL PARTITIONS.

XI. THE GENERAL CONTRACTOR SHALL PROVIDE ALL NECESSARY PROTECTION AGAINST DIRT AND DAMAGE.

XII. THE GENERAL CONTRACTOR SHALL PROVIDE, ERECT AND MAINTAIN TEMPORARY DUST BARRIERS/PARTITIONS AND OTHER ITEMS REQUIRED FOR PROPER PROTECTION OF AREAS ADJACENT TO THE WORK AND PROVIDE SAFE ACCESS TO THE PORTIONS THAT ARE NOT AFFECTED BY THE WORK.

XIII. ALL PERTINENT PRECAUTIONS FOR ACCIDENT PREVENTION RECOMMENDED BY THE ASSOCIATED GENERAL CONTRACTORS OF AMERICA, INC., OSHA, OR BY STATE AND LOCAL LAWS AND REGULATIONS, SHALL BE CONSIDERED TO FORM A PART OF THE CONTRACT WORK.

XIV. CONTRACTOR SHALL PROVIDE TEMPORARY LIGHT, POWER, TELEPHONE AND WATER AS REQUIRE, AND SHALL REMOVE ALL TEMPORARY WORK PRIOR TO COMPLETION OF THE JOB.

XV. CONTRACTOR SHALL KEEP A FULL SET OF COMPLETE UP-TO-DATE PLANS AVAILABLE AT THE JOB.

XVI. INSURANCE REQUIREMENTS:

A. THE CONTRACTOR SHALL PURCHASE AND MAINTAIN INSURANCE OF A FORM AND WITH COMPANIES SATISFACTORY TO THE OWNER, THE VILLAGE OF IRVINGTON, AND THE ARCHITECT.

B. ADDRESS ALL INQUIRIES CONCERNING INSURANCE REQUIREMENTS WITH THE BUILDING MANAGER AND SUBMIT ALL CERTIFICATES AS REQUIRED.

XVII. DEMOLITION - CUTTING - PROTECTION:

A. WHERE DEMOLITION, REMOVAL OR CUTTING OF NEW OPENINGS OCCURS, THE GENERAL CONTRACTOR IS TO PATCH AND REPAIR ALL SURFACES, READY TO RECEIVE NEW FINISHES OR TO MATCH EXISTING FINISHES INCLUDING BASES AND CEILINGS.

B. PROBE TO LOCATE UTILITIES OR STRUCTURE PRIOR TO REMOVING ANY PARTITIONS. DO ALL WORK SO AS NOT TO ENDANGER BUILDING STRUCTURE AND UTILITIES; PROBE TO LOCATE UTILITIES OR STRUCTURAL ELEMENTS PRIOR TO REMOVING ANY PARTITIONS. PROVIDE TEMPORARY BRACES AND OTHER SUPPORTS AS MAY BE REQUIRED TO ASSURE THE SAFETY OF THE EXISTING CONSTRUCTION, WORKMEN, OCCUPANTS AND FINISHES.

DO SUCH REQUIRED WORK WITH CARE INCLUDING SHORING, BRACING, DUST PROTECTION, ETC. BE RESPONSIBLE FOR ANY DAMAGE WHICH MAY BE CAUSED BY SUCH WORK TO ANY PART OR PARTS OF EXISTING STRUCTURES OR ITEMS DESIGNATED FOR REUSE. PERFORM PATCHING, RESTORATION AND NEW WORK AS REQUIRED.

D. PROVIDE ADEQUATE FIRE PROTECTION IN ACCORDANCE WITH LOCAL FIRE DEPARTMENT REGULATIONS.

E. BE RESPONSIBLE FOR ANY DAMAGE TO THE EXISTING STRUCTURE OR CONTENTS BY REASON OF THE INSUFFICIENCY OF PROTECTION PROVIDED.

F. NO STRUCTURAL PARTS OF THE EXISTING BUILDING SHALL BE DAMAGED OR REMOVED.

XXVIII. WATERPROOFING AND SOUNDPROOFING

A. WATERPROOFING MEMBRANE BY LATICRETE - "HYDRO BAN" OR EQUAL, .5-.8mm CURED THICKNESS MAX.

B. SOUNDPROOFING UNDERLAYMENT TO BE "QUITE BARRIER SOUNDPROOFING MATERIAL" OR EQUAL (WWW.SOUNDPROOFCOW.COM), MAX. $\frac{1}{8}$" THK.

XXIX. PLUMBING NOTES:

A. ALL PLUMBING WORK TO BE IN ACCORDANCE WITH THE NEW YORK STATE PLUMBING CODE, BY A LICENSED PLUMBING CONTRACTOR. CONTRACTOR IS TO OBTAIN ALL NECESSARY APPROVALS FROM ALL AGENCIES HAVING JURISDICTION.

XVXI. ELECTRICAL NOTES:

A. ENTIRE ELECTRICAL INSTALLATION SHALL BE IN ACCORDANCE WITH NEW YORK BOARD OF FIRE UNDERWRITERS, THE N.E.C., THE VILLAGE OF IRVINGTON BUILDING DEPARTMENT, AND ALL OTHER CONTROLLING AGENCIES. CONTRACTOR TO OBTAIN ALL NECESSARY APPROVALS FROM ALL AGENCIES HAVING JURISDICTION.

B. FURNISH AND INSTALL ALL LIGHTING FIXTURES AND OTHER ELECTRICAL FIXTURES AS NOTED ON THE DRAWINGS OR AS DIRECTED BY THE OWNER.

C. **SMOKE DETECTOR NOTES**:

1. THE INSTALLATION OF WIRING AND EQUIPMENT SHALL BE IN ACCORDANCE WITH THE NEW YORK STATE ELECTRICAL CODE.
2. SMOKE ALARMS SHALL BE INSTALLED IN EACH SLEEPING ROOM AND OUTSIDE EACH SEPARATE SLEEPING AREA IN THE IMMEDIATE VICINITY OF THE BEDROOMS.
3. SMOKE ALARMS SHALL BE LOCATED ON EACH ADDITIONAL STORY OF THE DWELLING, INCLUDING BASEMENTS AND HABITABLE ATTICS.
4. SMOKE ALARMS SHALL BE INSTALLED NOT LESS THAN THREE FEET HORIZONTALLY FROM THE DOOR OR OPENING OF A BATHROOM THAT CONTAINS A BATHTUB OR SHOWER UNLESS THIS WOULD PREVENT PLACEMENT OF A SMOKE ALARM AS REQUIRED BY CODE.
5. EACH SMOKE DETECTOR SHALL HAVE AN INTEGRAL TEST MEANS TO PERMIT THE OCCUPANT TO CHECK THAT IT IS OPERATIONAL. A CONTINUOUS POWER DISPLAY INDICATOR LIGHT IS RECOMMENDED. SMOKE ALARMS SHALL BE INTERCONNECTED AND HARD WIRED, OR AS NOTED BELOW.
6. SMOKE ALARMS IN EXISTING AREAS SHALL NOT BE REQUIRED TO BE INTERCONNECTED AND HARD WIRED WHERE INTERIOR WALL OR CEILING FINISHES ARE NOT REMOVED TO EXPOSE THE STRUCTURE
7. IF WALL MOUNTED THE CLOSET EDGE OF THE DETECTOR SHALL BE FOUR INCHES AND A MAXIMUM OF TWELVE INCHES FROM THE CEILING.
8. SMOKE ALARMS SHALL BE LISTED IN ACCORDANCE WITH UL 217. COMBINATION SMOKE AND CARBON MONOXIDE ALARMS SHALL BE LISTED IN ACCORDANCE WITH UL 217 AND UL 2034
9. UNITS TO BE EITHER, IONIZATION CHAMBER OR PHOTO ELECTRIC.
10. SMOKE ALARMS SHALL BE PERMITTED TO BE BATTERY OPERATED WHERE EXISTING INTERIOR WALL OR CEILING FINISHES ARE NOT REMOVED TO EXPOSE THE STRUCTURE.
11. SMOKE ALARMS SHALL NOT BE REQUIRED TO BE INTERCONNECTED WHERE BATTERY OPERATED ALARMS ARE PERMITTED.

CARBON MONOXIDE DETECTOR NOTES:

1. CARBON MONOXIDE DETECTORS TO BE INSTALLED IN ACCORDANCE WITH NEW YORK STATE BUILDING CODE.

XVX.CLEANING UP:

A. THE PREMISES AND THE JOB SITE SHALL BE MAINTAINED IN A REASONABLY NEAT AND ORDERLY CONDITION AND KEPT FREE FROM ACCUMULATION OF SOOT, WASTE MATERIALS AND RUBBISH DURING THE ENTIRE CONSTRUCTION PERIOD. REMOVE CRATES, CARTONS AND OTHER FLAMMABLE WASTER MATERIALS OR TRASH FROM THE WORK AREAS AT THE END OF EACH WORKING DAY.

B. DAMP, MOP, POLISH, VACUUM AND DUST ENTIRE JOB READY FOR TENANT'S OCCUPANCY.

.

XVXI. PROJECT CLOSE OUT:

A. PROVIDE ONE FULL GALLON OF EACH PAINT COLOR FOR TENANT'S USE.

B. PROVIDE ONE BOX OF ADDITIONAL FLOORING MATERIAL.

McC | Architecture pllc
25 n. dutcher st., irvington, ny 10533 | mcc-architecture.com
t: 917.887.0975 | e: dmcclure@mcc-architecture.com

Frimer Residence

97 Highland Lane • Irvington, NY

General Notes

REV. #/DATE	DESCRIPTION
1	BLDG. DEPT. CMNTS 6/21/21

REGISTERED ARCHITECT
DOUGLAS OLCOTT MCCLURE
023950
STATE OF NEW YORK

SPC
AS NOTED

TO THE BEST OF MY KNOWLEDGE BELIEF & PROFESSIONAL JUDGEMENT OF THE UNDERSIGNED, THE PLANS & SPECIFICATIONS DEPICTED ON THESE DRAWINGS ARE IN COMPLIANCE WITH THE APPLICABLE PROVISIONS OF THE NEW YORK STATE UNIFORM FIRE PREVENTION & BUILDING CODE & THE NEW YORK STATE ENERGY CONSERVATION CONSTRUCTION CODE CURRENTLY IN EFFECT

2113
2113-Set.dwg

INSULATION AND FENESTRATION REQUIREMENTS BY COMPONENT

FROM TABLE 402.1(2) AND R402.1.4 FROM 2020 ENERGY CONSERVATION CONSTRUCTION CODE OF NEW YORK STATE, BASED ON 5,750 HEATING DEGREE DAYS IN CLIMATE ZONE 4A (NOT MARINE)

SUB-SYSTEM	MAXIMUM U-FACTOR	MINIMUM R-VALUE
FENESTRATION	Ug = .35	R - 4
SKYLITE	Ug = .55	
GLAZED FENESTRATION	Ug = .40	
CEILING	Ug = .026	R - 49
FRAME WALL	Ug = .060	20 OR 13+5
MASS WALL	Ug = .098	8/13
FLOOR	Uf = .047	R - 19
BASEMENT WALL	Uf = .059	R - 10/13
SLAB PERIMETER and DEPTH		R10 FOR 2'
CRAWL SPACE WALL	Uf = .065	R - 10/13

A. R-VALUES ARE MINIMUMS U-FACTORS AND SHGC ARE MAXIMUMS WHEN INSULATION IS INSTALLED IN A CAVITY WHICH IS LESS THAN THE LABEL OR DESIGN THICKNESS OF THE INSULATION, THE INSTALLED R-VALUE OF THE INSULATION SHALL NOT BE LESS THAN THE R-VALUE SPECIFIED IN THE TABLE.

B. THE FENESTRATION U-FACTOR COLUMN EXCLUDES SKYLIGHTS THE SHGC COLUMN APPLIES TO ALL GLAZED FENESTRATION EXCEPTION: SKYLIGHTS MAY BE EXCLUDED FROM GLAZED FENESTRATION SHGC REQUIREMENTS IN CLIMATE ZONES I THROUGH 3 WHERE THE SHGC FOR SUCH SKYLIGHTS DOES NOT EXCEED 0 30 .

C. 15/ 19" MEANS R-IS CONTINUOUS INSULATION ON THE INTERIOR OR EXTERIOR OF THE HOME OR R-21 CAVITY INSULATION AT THE INTERIOR OF THE BASEMENT WALL. 15/19 SHALL BE PERMITTED TO BE MET WITH R-13 CAVITY INSULATION ON THE INTERIOR OF THE BASEMENT WALL PLUS R-S CONTINUOUS INSULATION ON THE INTERIOR OR EXTERIOR OF THE HOME '10/13' MEANS R-IO CONTINUOUS INSULATION ON THE INTERIOR OR EXTERIOR OF THE HOME OR R-13 CAVITY INSULATION AT THE INTERIOR OF THE BASEMENT WALL

D. R-5 SHALL BE ADDED TO THE REQUIRED SLAB EDGE R-VALUES FOR HEATED SLABS INSULATION DEPTH SHALL BE THE DEPTH OF THE FOOTING OR 2 FEET, WHICHEVER IS LESS IN CLIMATE ZONES I THROUGH 3 FOR HEATED SLABS

E. THERE ARE NO SHGC REQUIREMENTS IN THE MARINE ZONE

F. BASEMENT WALL INSULATION IS NOT REQUIRED IN WARM-HUMID LOCATIONS AS DEFINED BY FIGURE R301 AND TABLE R301

G. OR INSULATION SUFFICIENT TO FILL THE FRAMING CAVITY, R-21 MINIMUM

H. THE FIRST VALUE IS CAVITY INSULATION, THE SECOND VALUE S CONTINUOUS INSULATION, SO '13+5" MEANS R-13 CAVITY INSULATION PLUS R-5 CONTINUOUS INSULATION.

I. THE SECOND R-VALUE APPLIES WHEN MORE THAN HALF THE INSULATION IS ON THE INTERIOR OF THE MASS WALL

ENERGY NOTES:

1. I, DOUGLAS MCCLURE, CERTIFY THAT THESE PLANS AND SPECIFICATIONS COMPLY WITH

   A 2020 International Energy Conservation Construction Code of the New York State

2 ALL INSULATION SHALL BE AT MINIMUM PAPER FACED FIBERGLASS BATTS, WITH THE PAPER FACING THE WARM SIDE OF THE ASSEMBLY.

3. THE G.C. SHALL PROVIDE A PERMANENT CERTIFICATE POSTED ON OR IN THE ELECTRICAL DISTRIBUTION PANEL LISTING THE PREDOMINANT R-VALUES OF THE INSULATION INSTALLED PER SYSTEM THROUGH OUT THE RESIDENCE PER SECTION 401.3 OF THE ENERGY CONSERVATION CONSTRUCTION CODE OF NEW YORK STATE.

4. IFOR BLOWN IN INSULATION, THE SETTLED R-VALUE SHALL BE USED.

5. INSULATION VALUES SHOWN IN THE CHART ABOVE ARE MINIMUM VALUES REQUIRED BY CODE AND MAY NOT REFLECT THE INSULATION VALUES CALLED OUT IN THE CONSTRUCTION DOCUMENTS. WHEN TWO DIFFERENT INSULATION VALUES ARE CALLED OUT, CONTRACTORS ARE HEREBY DIRECTED TO INSTALL THE INSULATION WITH GREATER R-VALUE PER ASSEMBLY.

6. R-21 BATT INSULATION SHALL BE INSTALLED IN ALL 2X6 EXTERIOR WALLS.

R402.2.1 CEILINGS WITH ATTIC SPACES.
WHERE SECTION R402.1.2 WOULD REQUIRE R-38 INSULATION IN THE CEILING, INSTALLING R-30 OVER 100 PERCENT OF THE CEILING AREA REQUIRING INSULATION SHALL BE DEEMED TO SATISFY THE REQUIREMENT TOR R-38 WHEREVER THE FULL HEIGHT OF UNCOMPRESSED R-30 INSULATION EXTENDS OVER THE WALL TOP PLATE AT THE EAVES. SIMILARLY, WHERE SECTION R402.1.2 WOULD REQUIRE R-49 INSULATION IN THE CEILING, INSTALLING R-38 OVER 100 PERCENT OF THE CEILING AREA REQUIRING INSULATION SHALL BE DEEMED TO SATISFY THE REQUIREMENT TOR R-49 INSULATION WHEREVER THE FULL HEIGHT OF UNCOMPRESSED R-38 INSULATION EXTENDS OVER THE WALL TOP PLATE AT THE EAVES. THIS REDUCTION SHALL NOT APPLY TO THE U-FACTOR ALTERNATIVE APPROACH IN SECTION R402.1.4 AND THE TOTAL U-FACTOR ALTERNATIVE IN SECTION R402.1.5

R402.2.2 CEILINGS WITHOUT ATTIC SPACES.
WHERE SECTION R402.1.2 WOULD REQUIRE INSULATION LEVELS ABOVE R-30 AND THE DESIGN OF THE ROOF/CEILING ASSEMBLY DOES NOT ALLOW SUFFICIENT SPACE TOR THE REQUIRED INSULATION, THE MINIMUM REQUIRED INSULATION TOR SUCH ROOT/CEILING ASSEMBLIES SHALL BE R-30_ THIS REDUCTION OF INSULATION FROM THE REQUIREMENTS OF SECTION R402.1.2 SHALL BE LIMITED TO 500 SQUARE FEET (46 METER SQ) OR 20 PERCENT OF THE TOTAL INSULATED CEILING AREA, WHICHEVER IS LESS. THIS REDUCTION SHALL NOT APPLY TO THE U-FACTOR ALTERNATIVE APPROACH IN SECTION R402_1_4 AND THE TOTAL UA ALTERNATIVE IN SECTION

R402.2.3 EAVE BAFFLE.
FOR AIR-PERMEABLE INSULATIONS IN VENTED ATTICS, A BATTLE SHALL BE INSTALLED ADJACENT TO SOFFIT AND EAVE VENTS. BAFFLES SHALL MAINTAIN AN OPENING EQUAL OR GREATER THAN THE SIZE OF THE VENT. THE BATTLE SHALL EXTEND OVER THE TOP
OF THE ATTIC INSULATION. THE BATTLE SHALL BE PERMITTED TO BE ANY SOLID MATERIAL.

McC | Architecture pllc
25 n. dutcher st., irvington, ny 10533 | mcc-architecture.com
t: 917.887.0975 | e: dmcclure@mcc-architecture.com

Frimer Residence
97 Highland Lane • Irvington, NY

Energy Code

REV. #/DATE	DESCRIPTION
1	BLDG. DEPT. CMNTS 6/21/21

REGISTERED ARCHITECT
DOUGLAS OLCOTT MCCLURE
023950
STATE OF NEW YORK

TO THE BEST OF MY KNOWLEDGE BELIEF & PROFESSIONAL JUDGEMENT OF THE UNDERSIGNED, THE PLANS & SPECIFICATIONS DEPICTED ON THESE DRAWINGS ARE IN COMPLIANCE WITH THE APPLICABLE PROVISIONS OF THE NEW YORK STATE UNIFORM FIRE PREVENTION & BUILDING CODE & THE NEW YORK STATE ENERGY CONSERVATION CONSTRUCTION CODE CURRENTLY IN EFFECT

SPC2
AS NOTED

2113
2113-Set.dwg

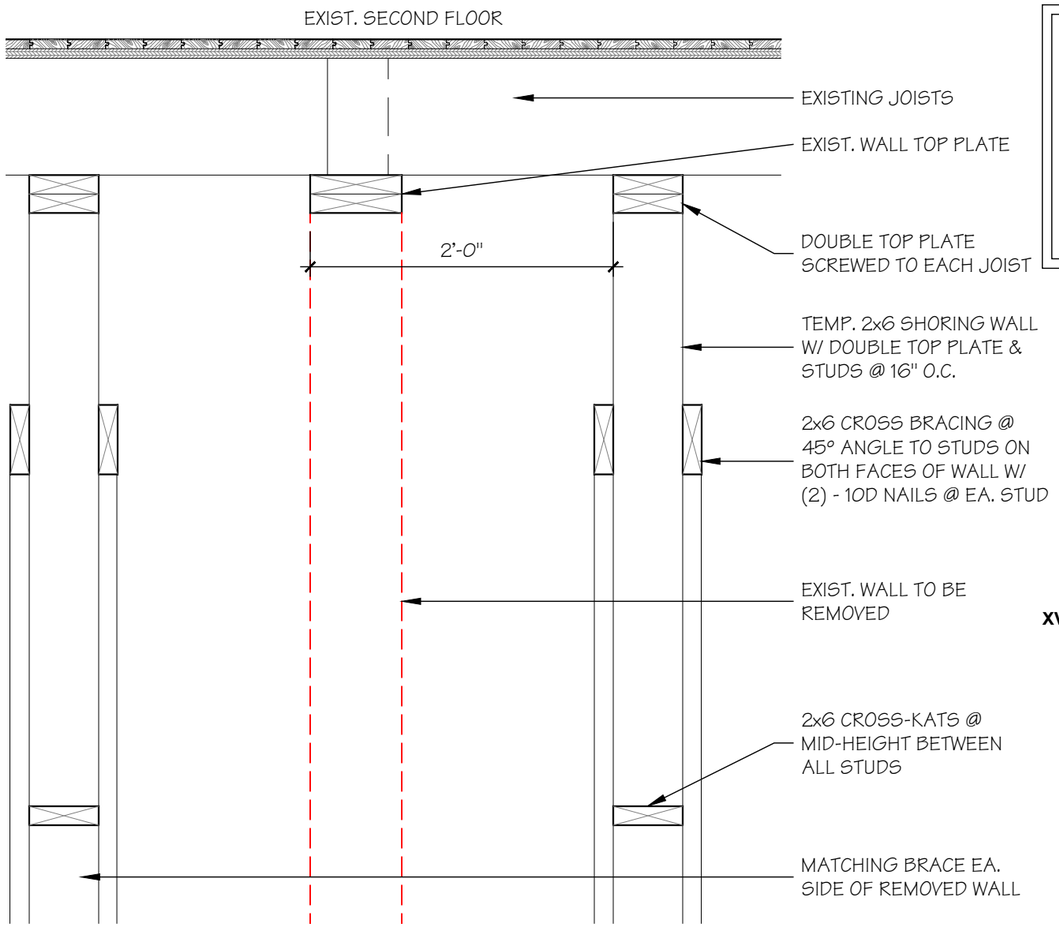

1 SHORING DETAIL
1"=1'-0"

SHORING NOTES:
G.C. TO PROVIDE ADEQUATE TEMPORARY SHORING AND BRACING AS REQQUIRED DURING REMOVAL AND REPLACEMENT OF EXISTING BEARING WALLS, TO PREVENT COLLAPSE AND/OR SHIFTING OF EXISTING STRUCTURE.

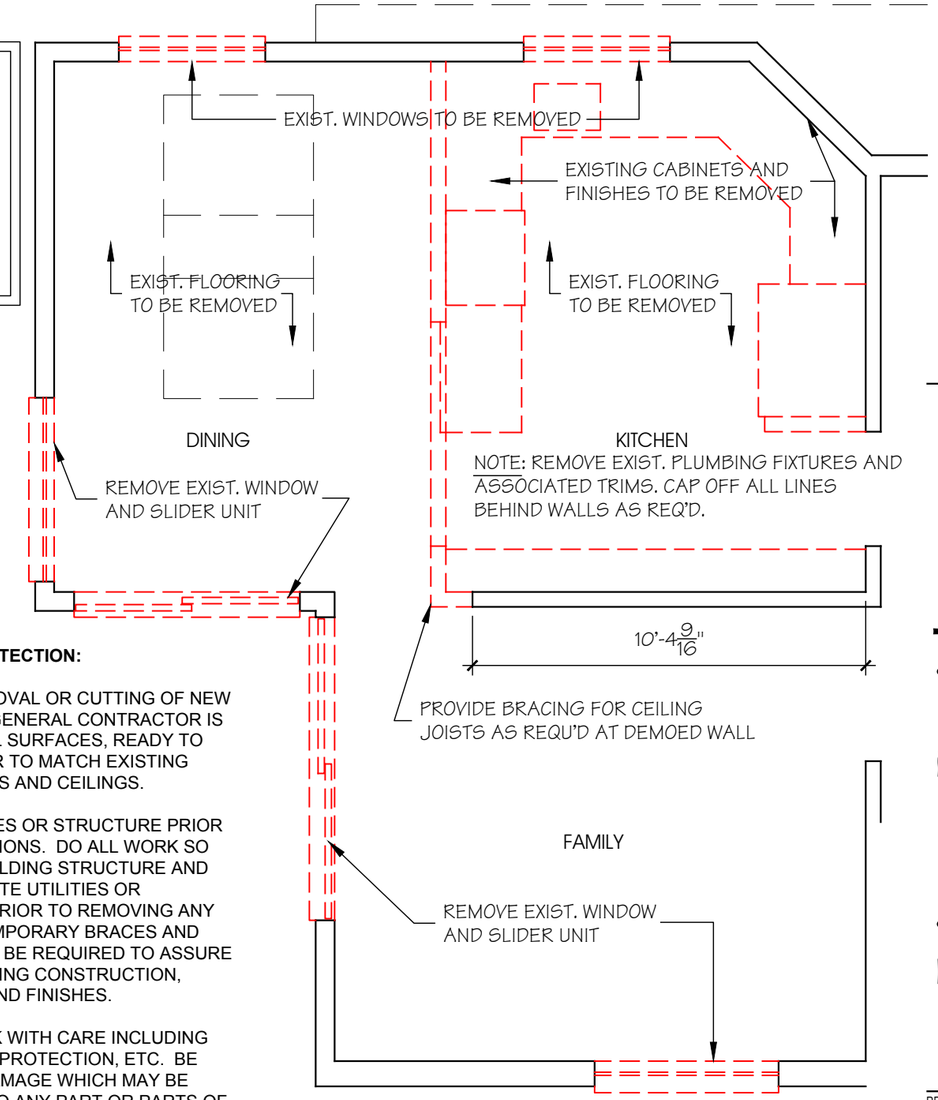

2 DEMOLITION PLAN
1/4"=1'-0"

XVII. DEMOLITION - CUTTING - PROTECTION:

A. WHERE DEMOLITION, REMOVAL OR CUTTING OF NEW OPENINGS OCCURS, THE GENERAL CONTRACTOR IS TO PATCH AND REPAIR ALL SURFACES, READY TO RECEIVE NEW FINISHES OR TO MATCH EXISTING FINISHES INCLUDING BASES AND CEILINGS.

B. PROBE TO LOCATE UTILITIES OR STRUCTURE PRIOR TO REMOVING ANY PARTITIONS. DO ALL WORK SO AS NOT TO ENDANGER BUILDING STRUCTURE AND UTILITIES; PROBE TO LOCATE UTILITIES OR STRUCTURAL ELEMENTS PRIOR TO REMOVING ANY PARTITIONS. PROVIDE TEMPORARY BRACES AND OTHER SUPPORTS AS MAY BE REQUIRED TO ASSURE THE SAFETY OF THE EXISTING CONSTRUCTION, WORKMEN, OCCUPANTS AND FINISHES.

DO SUCH REQUIRED WORK WITH CARE INCLUDING SHORING, BRACING, DUST PROTECTION, ETC. BE RESPONSIBLE FOR ANY DAMAGE WHICH MAY BE CAUSED BY SUCH WORK TO ANY PART OR PARTS OF EXISTING STRUCTURES OR ITEMS DESIGNATED FOR REUSE. PERFORM PATCHING, RESTORATION AND NEW WORK AS REQUIRED.

C. DO NOT LOAD OR PERMIT ANY PART OF ANY STRUCTURE TO BE LOADED TO SUCH AN EXTENT AS TO ENDANGER ITS SAFETY.

D. PROVIDE ADEQUATE FIRE PROTECTION IN ACCORDANCE WITH LOCAL FIRE DEPARTMENT REGULATIONS.

E. BE RESPONSIBLE FOR ANY DAMAGE TO THE EXISTING STRUCTURE OR CONTENTS BY REASON OF THE INSUFFICIENCY OF PROTECTION PROVIDED.

F. NO STRUCTURAL PARTS OF THE EXISTING BUILDING SHALL BE DAMAGED OR REMOVED.

TO THE BEST OF MY KNOWLEDGE BELIEF & PROFESSIONAL JUDGEMENT OF THE UNDERSIGNED, THE PLANS & SPECIFICATIONS DEPICTED ON THESE DRAWINGS ARE IN COMPLIANCE WITH THE APPLICABLE PROVISIONS OF THE NEW YORK STATE UNIFORM FIRE PREVENTION & BUILDING CODE & THE NEW YORK STATE ENERGY CONSERVATION CONSTRUCTION CODE CURRENTLY IN EFFECT

LEGEND

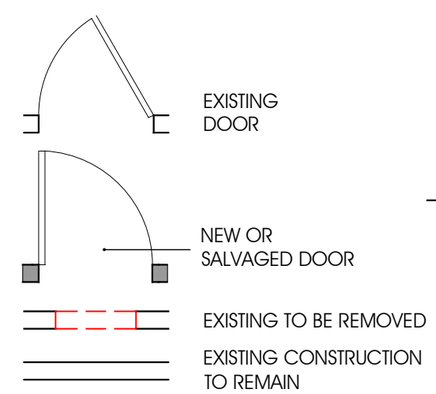

McC | Architecture pllc
25 n. dutcher st., irvington, ny 10533 | mcc-architecture.com
t: 917.887.0975 | e: dmcclure@mcc-architecture.com

Frimer Residence
97 Highland Lane • Irvington, NY

Demolition Plan

REV. #	DATE	DESCRIPTION
1		BLDG. DEPT. CMNTS
	6/21/21	

A1
AS NOTED

2113
2113-Set.dwg

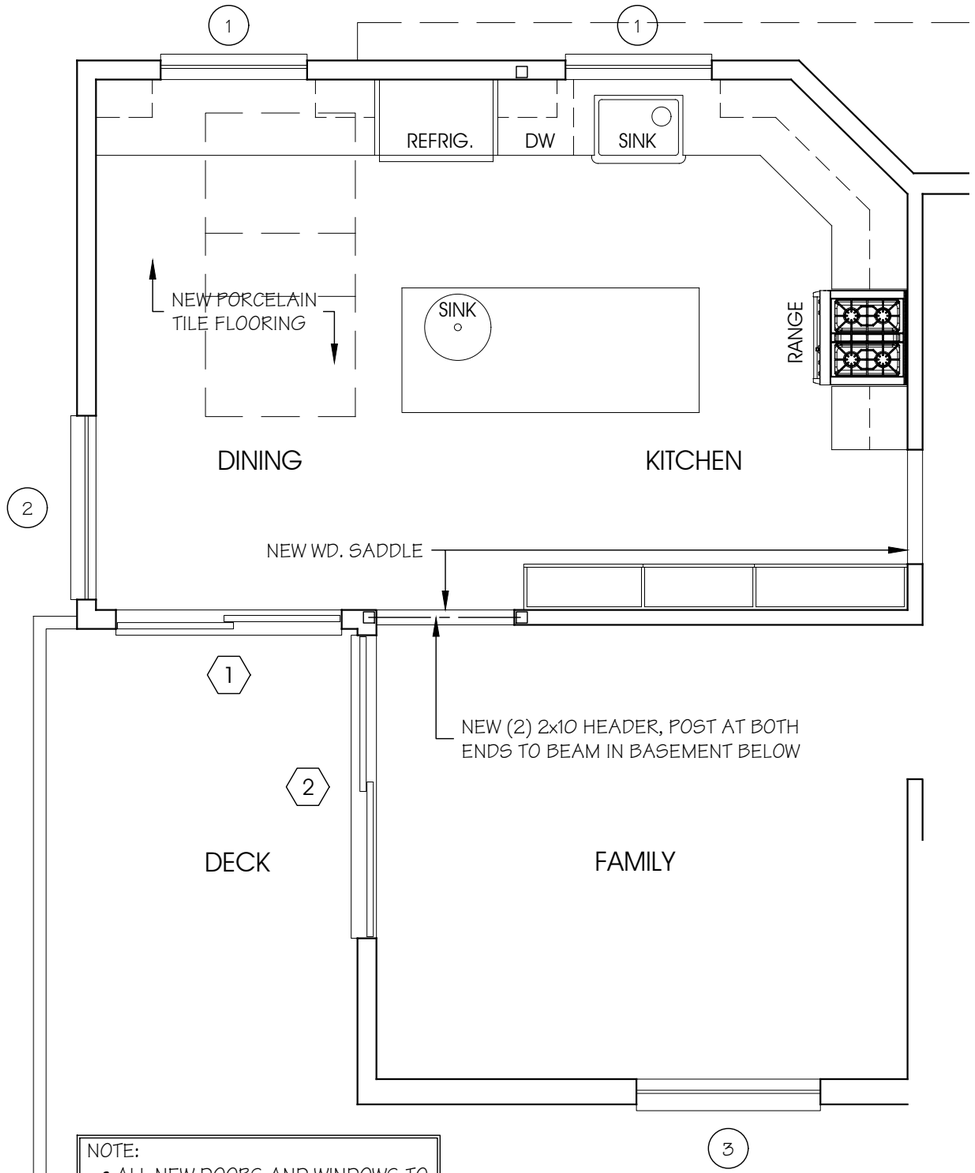

NOTE:
- ALL NEW DOORS AND WINDOWS TO BE SIZED TO FIT IN EXISTING OPENINGS. NO NEW HEADERS REQU'D.
- WINDOW, DOOR, CASED OPENINGS AND BASEBOARD TIRM TO MATCH EXISTING.

WINDOW SCHEDULE	BRONZE CLAD EXTERIOR PRIMED PINE INTERIOR	
#	UNIT SIZE	NOTES
1	46 1/2"x 35"	WHITE FOLDING HANDLE
2	58 1/2"x 59"	WHITE FOLDING HANDLE
3	59 1/2"x 47 1/2 "	WHITE FOLDING HANDLE

DOOR SCHEDULE	WHITE CLAD EXTERIOR PRIMED PINE INTERIOR		
#	UNIT No.	R.O.	NOTES
1	CN 60R66R	72"x 80"	MIXED HANDLE SET: DARK BRONZE EXTERIOR, BRASS INTERIOR. SDL MUNTINS WITH SPACER BAR
2	CN 80R66R	96"x 80"	MIXED HANDLE SET: DARK BRONZE EXTERIOR, BRASS INTERIOR. SDL MUNTINS WITH SPACER BAR

WINDOW & DOOR NOTES:
- WINDOWS AND DOORS BY MARVIN AS SUPPLIED BY JILCO WINDOW CORP
  CONTACT: MIKE FREIMAN, (t): (914) 248-6100
  QUOTE #:J8KU86E, 4/18/21
- WINDOWS: MARVIN ULTIMATE
  DOORS: MARVIN SIGNATURE
- PROVIDE CHARCOAL FIBERGLASS MESH SCREENS AT ALL UNITS.
- 4 9/16" JAMBS
- LOW-E GLASS W/ARGON GAS
- DOORS TO HAVE TEMPERED GLASS
- INTERIORS TO BE PRIMED PINE
- INTERIOR CASINGS AS SELECTED BY OWNER
- EXTERIOR CASINGS TO MATCH EXISTING
- G.C. TO CONFIRM ALL DIMENSIONS PRIOR TO ORDERING

HEADER SCHEDULE	
OPENING	HEADER
UP TO 4'-0"	(2) 2" X 8" WOOD
4'-0" TO 6'-0"	(2) 2" X 10" WOOD
6'-0" TO 10'-0"	(2) 2" X 12" WOOD
NOTE: SEE PLAN FOR ADDITIONAL FRAMING	

NOTE:
1. INSTALL MIN TWO STUDS AT ENDS OF HEADER

McC | Architecture pllc
25 n. dutcher st., irvington, ny 10533 | mcc-architecture.com
t: 917.887.0975 | e: dmcclure@mcc-architecture.com

Frimer Residence
97 Highland Lane • Irvington, NY

Construction Plan

REV. #/DATE	DESCRIPTION
1	BLDG. DEPT. CMNTS 6/21/21

REGISTERED ARCHITECT
DOUGLAS OLCOTT MCCLURE
023950
STATE OF NEW YORK

A2
1/4"=1'-0"

TO THE BEST OF MY KNOWLEDGE BELIEF & PROFESSIONAL JUDGEMENT OF THE UNDERSIGNED, THE PLANS & SPECIFICATIONS DEPICTED ON THESE DRAWINGS ARE IN COMPLIANCE WITH THE APPLICABLE PROVISIONS OF THE NEW YORK STATE UNIFORM FIRE PREVENTION & BUILDING CODE & THE NEW YORK STATE ENERGY CONSERVATION CONSTRUCTION CODE CURRENTLY IN EFFECT

2113
2113-Set.dwg

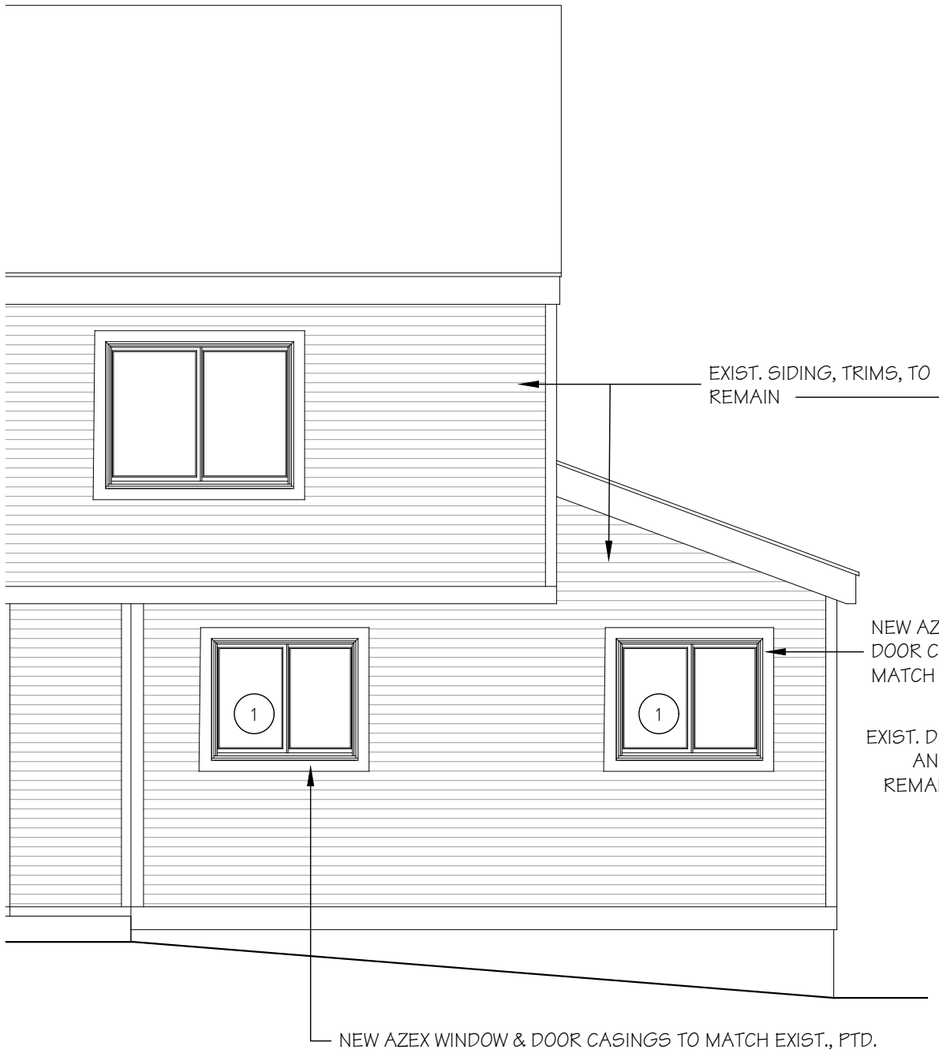

1 WEST (ENTRY) ELEVATION
1/4"=1'-0"

NOTE:
SEE WINDOW AND DOOR SCHEDULES ON SHT. A2 FOR UNIT INFORMATION

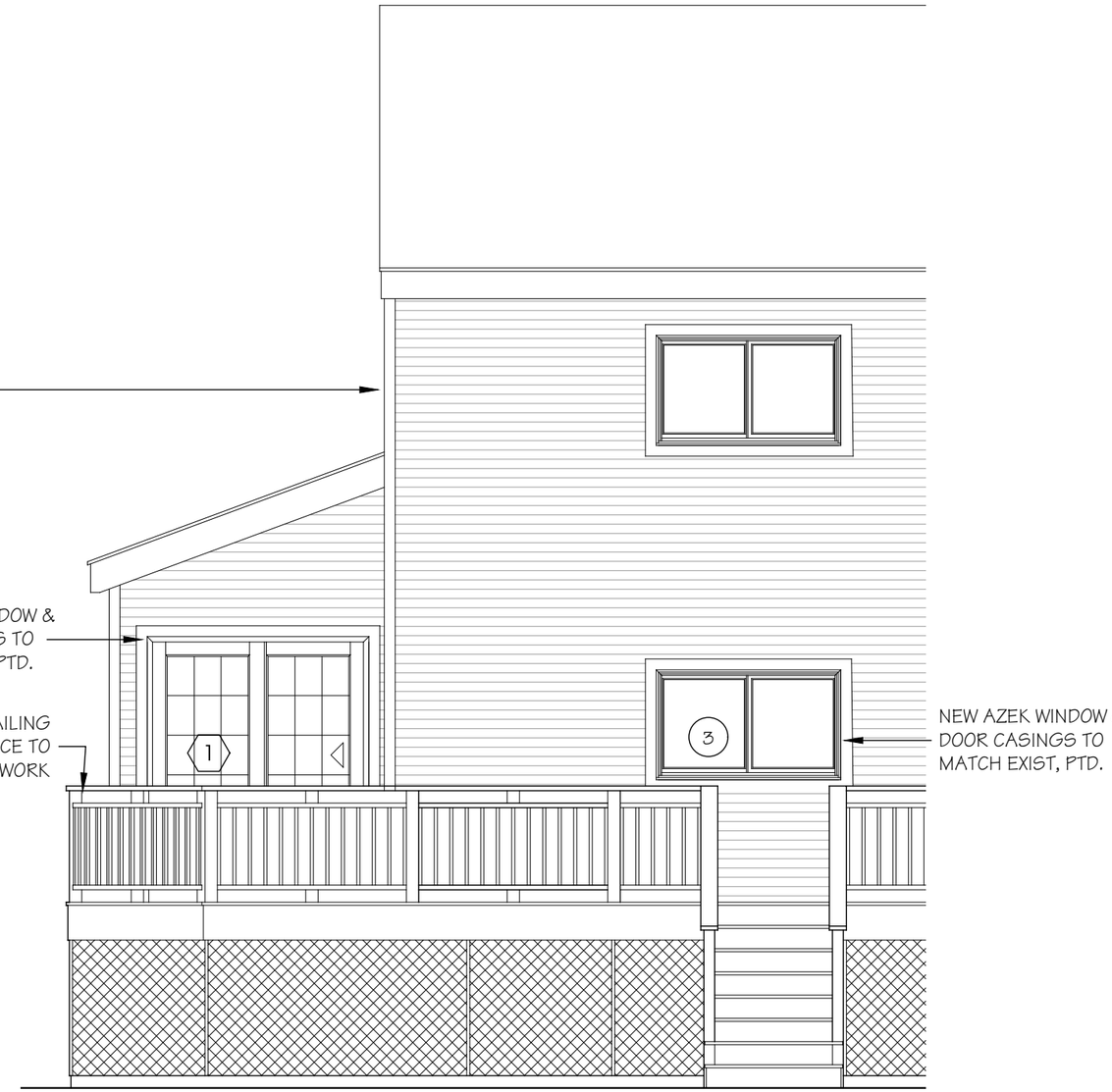

2 EAST ELEVATION
1/4"=1'-0"

McC | Architecture pllc
25 n. dutcher st., irvington, ny 10533 | mcc-architecture.com
t: 917.887.0975 | e: dmcclure@mcc-architecture.com

Frimer Residence
97 Highland Lane • Irvington, NY

Elevations

REV. #	DATE	DESCRIPTION
1		BLDG. DEPT. CMNTS
	6/21/21	

REGISTERED ARCHITECT
DOUGLAS OLCOTT MCCLURE
023950
STATE OF NEW YORK

TO THE BEST OF MY KNOWLEDGE BELIEF & PROFESSIONAL JUDGEMENT OF THE UNDERSIGNED, THE PLANS & SPECIFICATIONS DEPICTED ON THESE DRAWINGS ARE IN COMPLIANCE WITH THE APPLICABLE PROVISIONS OF THE NEW YORK STATE UNIFORM FIRE PREVENTION & BUILDING CODE & THE NEW YORK STATE ENERGY CONSERVATION CONSTRUCTION CODE CURRENTLY IN EFFECT

A3
¼"=1'-0"

2113
2113-Set.dwg

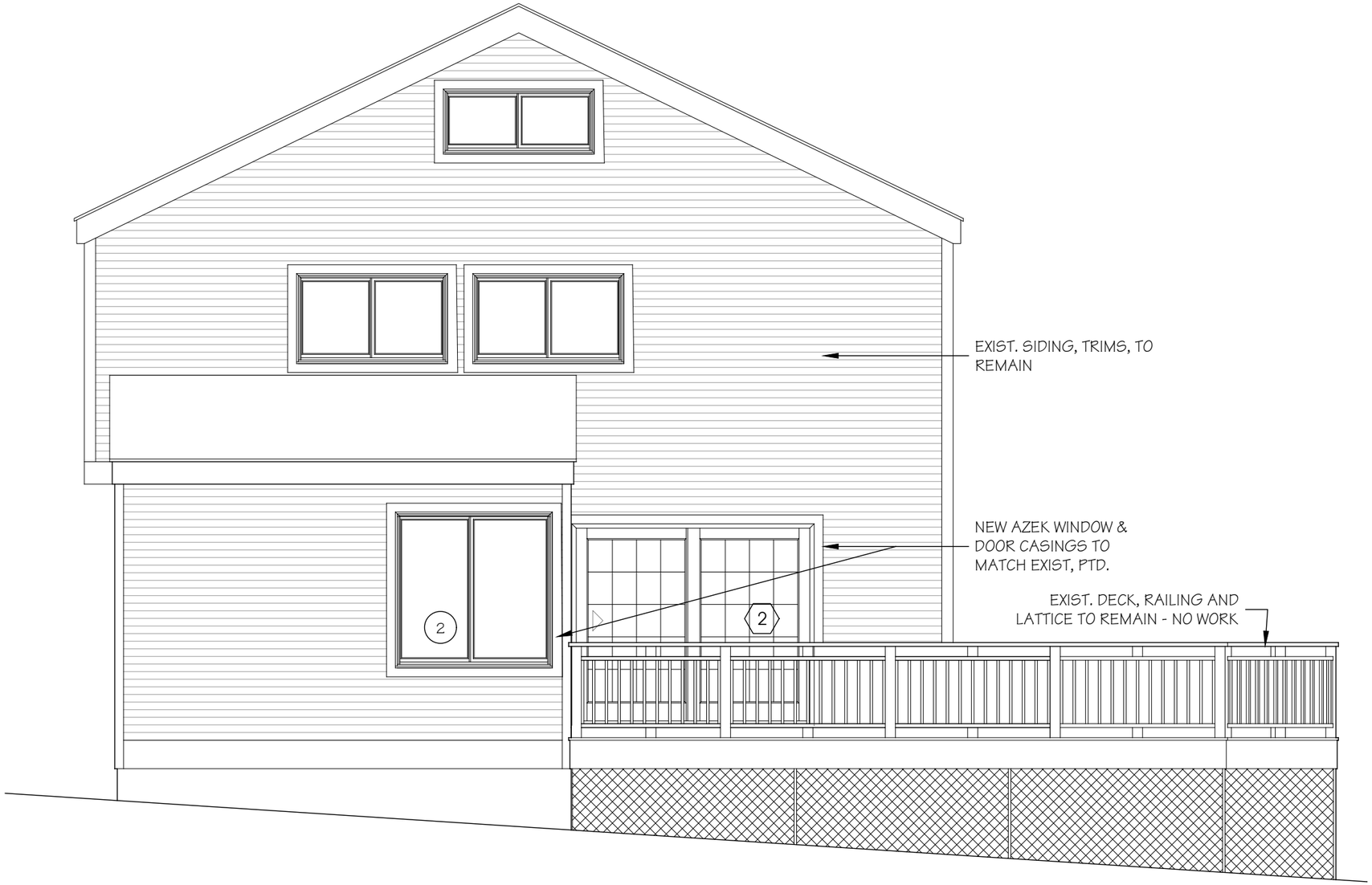

1 SOUTH ELEVATION
1/4"=1'-0"

NOTE:
SEE WINDOW AND DOOR SCHEDULES ON SHT. A2 FOR UNIT INFORMATION

McC | Architecture pllc
25 n. dutcher st., irvington, ny 10533 | mcc-architecture.com
t: 917.887.0975 | e: dmcclure@mcc-architecture.com

Frimer Residence
97 Highland Lane • Irvington, NY

Elevation

REV. #/DATE	DESCRIPTION
1	BLDG. DEPT. CMNTS 6/21/21

REGISTERED ARCHITECT
DOUGLAS OLCOTT MCCLURE
023950
STATE OF NEW YORK

A4
1/4"=1'-0"

TO THE BEST OF MY KNOWLEDGE BELIEF & PROFESSIONAL JUDGEMENT OF THE UNDERSIGNED, THE PLANS & SPECIFICATIONS DEPICTED ON THESE DRAWINGS ARE IN COMPLIANCE WITH THE APPLICABLE PROVISIONS OF THE NEW YORK STATE UNIFORM FIRE PREVENTION & BUILDING CODE & THE NEW YORK STATE ENERGY CONSERVATION CONSTRUCTION CODE CURRENTLY IN EFFECT

2113
2113-Set.dwg

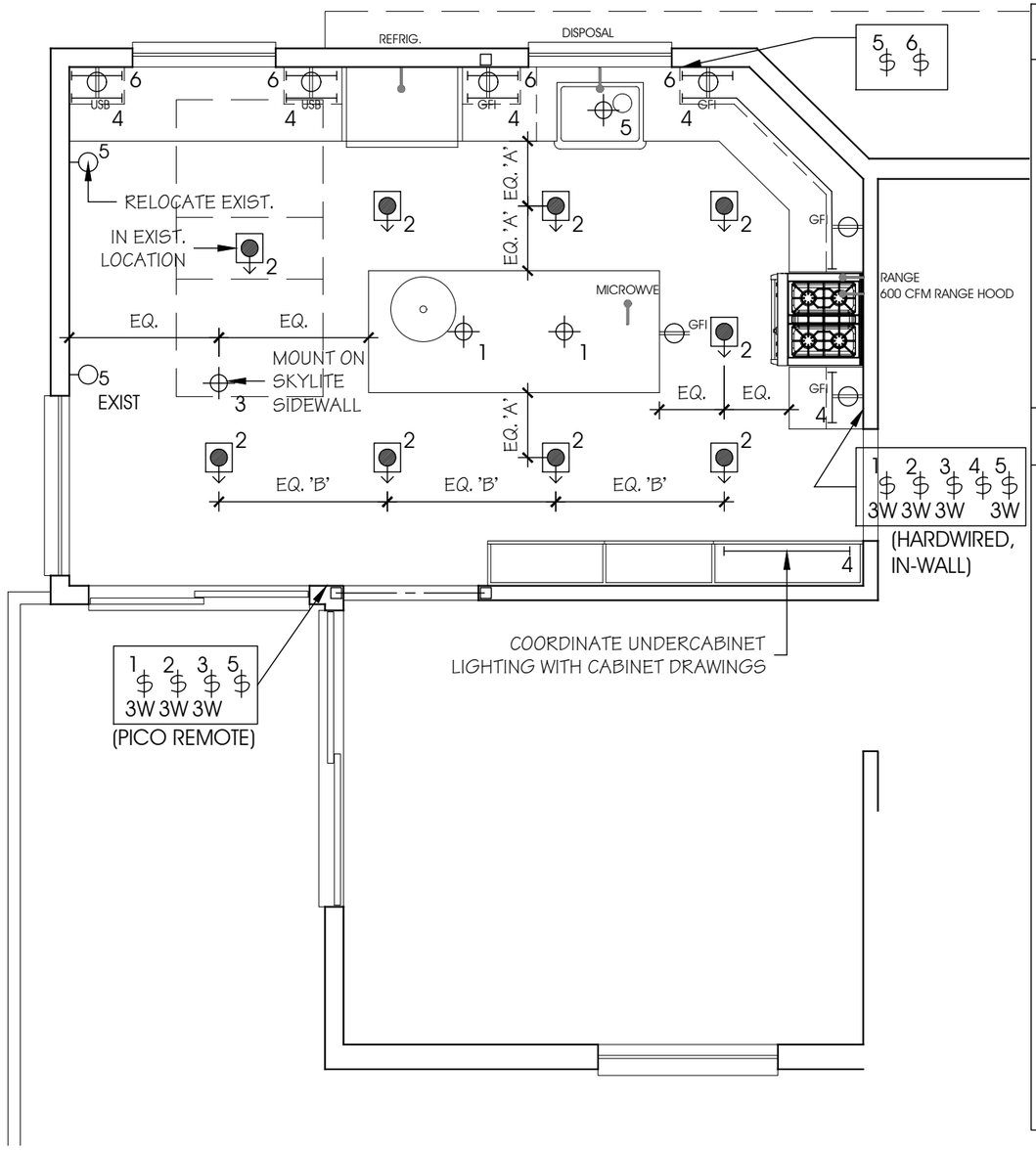

1 LIGHT. & POWER PLAN
¼"=1'-0"

POWER LEGEND:

NOTE: ONLY NEW OUTLETS AND OTHER ELECTRICAL DEVICES ARE SHOWN. EXISTING OUTLETS TO BE RECIRCUITED, REPLACED, OR ABANDONED AS DIRECTED BY OWNER AND AS PER EXIST. NEW YORK STATE ELECTRICAL CODE

- DUPLEX ELECTRIC OUTLET MOUNTED @ 15" A.F.F. UNLESS OTHERWISE NOTED.
- GFI — G.F.I. OUTLET MOUNTED @ 42" A.F.F. UNLESS OTHERWISE NOTED.
- USB — DUPLEX ELECTRIC OUTLET WITH INTEGRATED USB MOUNTED @ 42" A.F.F. UNLESS OTHERWISE NOTED.
- APPLIANCE HOOK UP - VERIFY CONNECTION W/MANUFACTURE'S CUT

LIGHTING LEGEND:

- DIMMER SWITCH
- FIXTURE SYMBOL
- DIMMER SWITCH SINGLE LOCATION LUTRON CASETA, COLOR: WHITE
- 2 — RECESSED ADJUSTABLE DOWN LIGHT
  MANUF: JUNO
  HOUSING: IC1RLEDT24 REMODEL HOUSING
  TRIM: 4RLA G2 06LM 30K 90CRI WFL 120 FRPC WH
  SIZE: 4" ROUND GIMBAL TRIM
  FINISH: WHITE
  LAMP: DIMMABLE LED, 600 LM, 3000K, WIDE FLOOD
- 4 — SURFACE MOUNTED DECORATIVE WALL SCONCE INCANDESCENT FIXTURE - SUPPLIED BY OWNER - 100 WATTS SET MOUNTING HEIGHT IN FIELD WITH ARCHITECT.
- 3 — SURFACE MOUNTED STRIP LIGHTING MOUNTED TO THE UNDERSIDE OF THE CABINETS
  MANUF: W.A.C. LIGHTING LED STRIP LIGHT OR EQUAL
  COLOR: 2700K
- 3 — SURFACE MOUNTED DECORATIVE CEILING INCANDESCENT FIXTURE ON JUNCTION BOX - SUPPLIED BY OWNER - 100 WATTS

NOTE:

MINIMUM 50% OF ALL FIXTURE LAMPS TO BE HIGH EFFICIENCY, AS PER NY STATE ENERGY CONSERVATION CODE.

NOTE:

COMBINATION SMOKE & CO DETECTORS SHALL BE INSTALLED THROUGHOUT THE DWELLING UNIT IN ACCORDANCE WITH NY STATE CODE. INCLUDING, BUT NOT LIMITED TO: OUTSIDE OF EACH SEPARATE AREA IN THE IMMEDIATE VICINITY OF THE BEDROOMS, & IN BASEMENT & RECREATION AREAS.

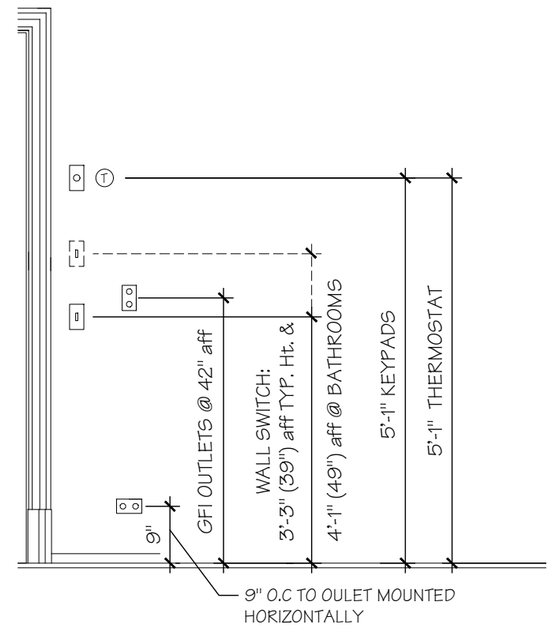

2 SWITCH & OUTLET HEIGHTS
N.T.S.

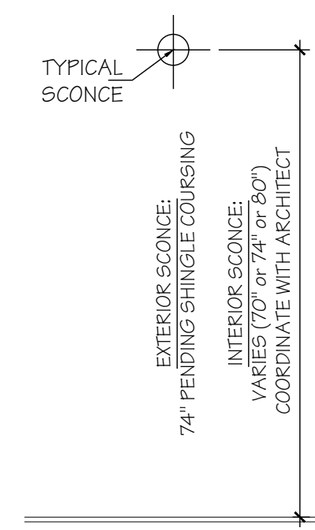

3 SCONCE HEIGHTS
N.T.S.

McC | Architecture pllc
25 n. dutcher st., irvington, ny 10533 | mcc-architecture.com
t: 917.887.0975 | e: dmcclure@mcc-architecture.com

Frimer Residence

97 Highland Lane • Irvington, NY

Electrical Plan

REV. #/DATE	DESCRIPTION
1	BLDG. DEPT. CMNTS 6/21/21

REGISTERED ARCHITECT DOUGLAS OLCOTT MCCLURE 023950 STATE OF NEW YORK

E1
¼"=1'-0"

TO THE BEST OF MY KNOWLEDGE BELIEF & PROFESSIONAL JUDGEMENT OF THE UNDERSIGNED, THE PLANS & SPECIFICATIONS DEPICTED ON THESE DRAWINGS ARE IN COMPLIANCE WITH THE APPLICABLE PROVISIONS OF THE NEW YORK STATE UNIFORM FIRE PREVENTION & BUILDING CODE & THE NEW YORK STATE ENERGY CONSERVATION CONSTRUCTION CODE CURRENTLY IN EFFECT

2113
2113-Set.dwg