APPLICATION FOR BUILDING PERMIT

The Village of Irvington | 85 Main St | Irvington NY 10533

Application Number:	796	Date:	10/03/2022
Job Location:	13 N COTTENET ST	Parcel ID:	2.40-13-16
Property Owner:	Alayne Katz	Property Class:	TWO FAMILY RES
Occupancy:	One/ Two Family	Zoning:	
Common Name:			

Applicant	Contractor
Eric Eyges	Eric Eyges
Rivertown Solar LLC	Rivertown Solar LLC
64 Main St.Irvington NY 10533	64 Main St. Irvington NY 10533
914-325-2167	914-325-2167

Description of Work

Type of Work:	Solar Panels	Applicant is:	Contractor
Work Requested by:	The Owner	In association with:	
Cost of Work (Est.):	34944.00	Property Class:	TWO FAMILY RES

Description of Work

Installation of solar panels on rooftop.

Please Note: Completing the application does not constitute a permit to commence construction. To obtain your permit follow the instructions on the instruction page provided on page 3.

Job Location: 13 N COTTENET ST Parcel Id: 2.40-13-16

AFFIDAVIT OF APPLICANT

I **Eric Eyges** being duly sworn, depose and says: That s/he does business as: **Rivertown Solar LLC** with offices at: **64 Main St. Irvington NY 10533** and that s/he is:

- ☐ The owner of the property described herein.
- ☐ The _____ of the New York Corporation _____ with offices at:

  _____ duly authorized by resolution of the Board of Directors, and that

  said corporation is duly authorized by the owner to make this application.

- ☐ A general partner of _____ with offices _____ and that said Partnership is duly authorized by the Owner to make this application.
- ☐ The Lessee of the premises, duly authorized by the owner to make this application.
- ☐ The Architect of Engineer duly authorized by the owner to make this application.
- ☐ The contractor authorized by the owner to make this application.

That the information contained in this application and on the accompanying drawings is true to the best of his knowledge and belief. The undersigned hereby agrees to comply with all the requirements of the New York State Uniform Fire Prevention and Building Code, the Village of Irvington Building Code, Zoning Ordinance and all other laws pertaining to same, in the construction applied for, whether or not shown on plans or specify in this application.

Sworn to before me this _____ day of _____of _____

_____ _____

Notary Public / Commission of Deeds Applicant's Signature

OWNER'S AUTHORIZATION

I **Alayne Katz** as the owner of the subject premises and have authorized the contractor named above to perform the work under the subject application.

Owner phone number _____ Owner email address _____

☐ _____ I hereby acknowledge that it is my responsibility as the **property owner** to ensure that if the permit (if issued) receives a Final Certificate of Approval from the Building Department and further that if a Final Certificate of Approval is not obtained upon completion of the construction, a property violation may be placed on the property for which this permit is being requested.

Sworn to before me this _____ day of _____ of _____

_____ _____

Notary Public / Commission of Deeds Applicant's Signature

INSTRUCTIONS

REQUIREMENTS FOR OBTAINING A PERMIT:

The following items must be submitted in order to obtain a Building Permit:

1. One (1) Building Permit application signed by the owner or a notarized Agent Letter.
2. One (1) property survey (signed and sealed), reflecting existing conditions.
3. Two (2) sets of construction drawings and specifications, including existing and proposed conditions, state design criteria, structural and architectural details, plans, and cross sections, mechanical, electrical, and plumbing drawings (signed and sealed by a likened professional).
4. One USB with all plans (with Licensed Professionals certification/stamp) and specifications in PDF (file size must be less than 25MB).
5. Copy of approved site plan from the Irvington Planning Board when applicable (required on all increases of FAR, footprint, coverage, driveways and increases of cubic content under a roof).
6. Approval by the Architectural Review Board (ARB) when applicable. An additional five (5) sets of construction drawings and specifications (please see ARB requirements (available on the village web site www.irvingtonny.gov) prior to submission).
7. Visit the Village of Irvington website www.irvingtonny.gov for additional check list for solar panels, generators, underground propane tanks, signs and awnings(found in forms and documents in the Building & Planning General Information folder).
8. Village Zoning Code is available on the Village website: www.irvingtonny.gov.
9. Provide evidence that the application meets the NYS Energy code as described by www.dos.state.ny.us/code/energycode/overview.htm

Contractor Requirements in order to obtain a Building Permit:

10. Contractor's Certificate of Liability listing the Village of Irvington as the Certificate Holder with no disclaimer in the description other than certificate holder is named additional insured (any additional comments will not be accepted).
11. Contractor's Workers Compensation C-105 form (or equivalent) listing the Village of Irvington as Certificate Holder.
12. Copy of Contractor's Westchester County Home Improvement License.
13. All information above uploaded into permit application with the contractor's contact information, including mailing address, phone number, and email address.
14. Contractor's signature on Affidavit of Contractor (required prior to issuance of the permit).

Please Note:

-State Law requires that the contractor submits a copy of Workman's Compensation as required by the New York State Disability Insurance naming the Department of Buildings, Village of Irvington as certificate holder and showing coverage for general contacting and the locations covered by such insurance. If structure is to be demolished a copy of Liability Insurance must also be submitted.

- Please be advised under State and Municipal Laws, the Workman's Compensation and Disability benefits insurance must be submitted on separate state approved forms. The "Acord Form" is no longer acceptable as proof of Workman's Compensation coverage. Further information or questions may be answered by calling the NYS Bureau of Compliance at (518) 486-6307 or by visiting their website or by contacting your insurance provider.

FEES ASSOCIATED WITH BUILDING PERMIT APPLICATION(All fees must be paid at time of application):

Fee schedule

Building Permit (Non-Refundable)

* Application fee $85 __85_
* Permit fee $17 per thousand dollars ($1000) of estimated cost of construction, or fraction thereof _____

• Inspection Fees (as applicable)

• Insulation: $50	• Footing: $50
• Solid Fuel: $50	• Preparation for concrete slabs and walls: $50
• Foundation and footing drain: $50	• Framing: $50
• Energy Code Compliance: $50	• Building systems, including underground and rough-in: $50
• Sediment and erosion control: $50	• Fire resistant construction and penetrations: $50
• Footing: $50	• Final Inspection for C.O.: $50
• Preparation for concrete slabs and walls: $50	• State and local laws (per re-inspection): $50

Total Inspections _____

* Certificate of Occupancy Fees: One dollar ($1.00) per thousand dollars of estimated cost. Minimum Fee $25.00
* Permit Revisions or Amendment: $50.00 (plus $17 per thousand ($1000), of the estimated cost of construction and any additional inspections fees). _____

* Re-inspection fee for work not ready at time of inspection or not in compliance: $50 _____
* Applications for Undocumented Work/ Legalizing: Applications to legalize work done prior toapplying for and receiving a building permit shall pay double all applicable fees and inspections, including the cost of construction based on the cost of all proposed work being legalized at the time of application. Minimum fee $500.00. _____

(To be collected at time of submission of application)Total _____

(Note: pursuant to 224-54A all permits are valid for one (1) year from date on permit
Any permit that expires will be subject to additional fees.)

RIVER-3

OP ID: LF

CERTIFICATE OF LIABILITY INSURANCE

DATE (MM/DD/YYYY) 05/13/2022

THIS CERTIFICATE IS ISSUED AS A MATTER OF INFORMATION ONLY AND CONFERS NO RIGHTS UPON THE CERTIFICATE HOLDER. THIS CERTIFICATE DOES NOT AFFIRMATIVELY OR NEGATIVELY AMEND, EXTEND OR ALTER THE COVERAGE AFFORDED BY THE POLICIES BELOW. THIS CERTIFICATE OF INSURANCE DOES NOT CONSTITUTE A CONTRACT BETWEEN THE ISSUING INSURER(S), AUTHORIZED REPRESENTATIVE OR PRODUCER, AND THE CERTIFICATE HOLDER.

IMPORTANT: If the certificate holder is an ADDITIONAL INSURED, the policy(ies) must have ADDITIONAL INSURED provisions or be endorsed. If SUBROGATION IS WAIVED, subject to the terms and conditions of the policy, certain policies may require an endorsement. A statement on this certificate does not confer rights to the certificate holder in lieu of such endorsement(s).

PRODUCER
845-278-7070
Feehan Insurance Agency
P.O. Box 870
Carmel, NY 10512
Terence Feehan

CONTACT NAME: Terence Feehan
PHONE (A/C, No, Ext): 845-278-7070 FAX (A/C, No): 845-278-6496
E-MAIL ADDRESS: carolb@feehaninsurance.com

INSURER(S) AFFORDING COVERAGE	NAIC #
INSURER A : Evanston Insurance Co.	35378
INSURER B :	
INSURER C :	
INSURER D :	
INSURER E :	
INSURER F :	

INSURED
Rivertown Solar LLC
64 Main Street
Irvington, NY 10533

COVERAGES **CERTIFICATE NUMBER:** **REVISION NUMBER:**

THIS IS TO CERTIFY THAT THE POLICIES OF INSURANCE LISTED BELOW HAVE BEEN ISSUED TO THE INSURED NAMED ABOVE FOR THE POLICY PERIOD INDICATED. NOTWITHSTANDING ANY REQUIREMENT, TERM OR CONDITION OF ANY CONTRACT OR OTHER DOCUMENT WITH RESPECT TO WHICH THIS CERTIFICATE MAY BE ISSUED OR MAY PERTAIN, THE INSURANCE AFFORDED BY THE POLICIES DESCRIBED HEREIN IS SUBJECT TO ALL THE TERMS, EXCLUSIONS AND CONDITIONS OF SUCH POLICIES. LIMITS SHOWN MAY HAVE BEEN REDUCED BY PAID CLAIMS.

INSR LTR	TYPE OF INSURANCE	ADDL INSD	SUBR WVD	POLICY NUMBER	POLICY EFF (MM/DD/YYYY)	POLICY EXP (MM/DD/YYYY)	LIMITS	
A	X COMMERCIAL GENERAL LIABILITY						EACH OCCURRENCE	$ 1,000,000
	CLAIMS-MADE X OCCUR	X		3FD4845	12/15/2021	12/15/2022	DAMAGE TO RENTED PREMISES (Ea occurrence)	$ 100,000
							MED EXP (Any one person)	$ 5,000
							PERSONAL & ADV INJURY	$ 1,000,000
	GEN'L AGGREGATE LIMIT APPLIES PER:						GENERAL AGGREGATE	$ 2,000,000
	POLICY X PRO-JECT LOC						PRODUCTS - COMP/OP AGG	$ 2,000,000
	OTHER:							$
	AUTOMOBILE LIABILITY						COMBINED SINGLE LIMIT (Ea accident)	$
	ANY AUTO						BODILY INJURY (Per person)	$
	OWNED AUTOS ONLY / SCHEDULED AUTOS						BODILY INJURY (Per accident)	$
	HIRED AUTOS ONLY / NON-OWNED AUTOS ONLY						PROPERTY DAMAGE (Per accident)	$
								$
	UMBRELLA LIAB / OCCUR						EACH OCCURRENCE	$
	EXCESS LIAB / CLAIMS-MADE						AGGREGATE	$
	DED / RETENTION $							$
	WORKERS COMPENSATION AND EMPLOYERS' LIABILITY						PER STATUTE / OTH-ER	
	ANY PROPRIETOR/PARTNER/EXECUTIVE OFFICER/MEMBER EXCLUDED? Y / N (Mandatory in NH)	N / A					E.L. EACH ACCIDENT	$
	If yes, describe under DESCRIPTION OF OPERATIONS below						E.L. DISEASE - EA EMPLOYEE	$
							E.L. DISEASE - POLICY LIMIT	$

DESCRIPTION OF OPERATIONS / LOCATIONS / VEHICLES (ACORD 101, Additional Remarks Schedule, may be attached if more space is required)

Village of Irvington is included as an additional insured.
Location of work: 23 Main Street, Irvington, NY 10533

CERTIFICATE HOLDER

IRVIVI1

Village of Irvington
Building Department
85 Main Street
Irvington, NY 10533

CANCELLATION

SHOULD ANY OF THE ABOVE DESCRIBED POLICIES BE CANCELLED BEFORE THE EXPIRATION DATE THEREOF, NOTICE WILL BE DELIVERED IN ACCORDANCE WITH THE POLICY PROVISIONS.

AUTHORIZED REPRESENTATIVE
Terence Feehan

© 1988-2015 ACORD CORPORATION. All rights reserved.
The ACORD name and logo are registered marks of ACORD

NEW PV SYSTEM: 9.975 kWp

KATZ RESIDENCE

13 N COTTENET
IRVINGTON, NY 10522
ASSESSOR'S #: 2.40-13-16

GENERAL NOTES

1.1.1 **PROJECT NOTES:**

1.1.2 THIS PHOTOVOLTAIC (PV) SYSTEM SHALL COMPLY WITH THE NATIONAL ELECTRIC CODE (NEC) ARTICLE 690, ALL MANUFACTURERS'S LISTING AND INSTALLATION INSTRUCTIONS, AND THE RELEVANT CODES AS SPECIFIED BY THE AUTHORITY HAVING JURISDICTION'S (AHJ) APPLICABLE CODES.

1.1.3 THE UTILITY INTERCONNECTION APPLICATION MUST BE APPROVED AND PV SYSTEM INSPECTED PRIOR TO PARALLEL OPERATION

1.1.4 GROUND FAULT DETECTION AND INTERRUPTION (GFDI) DEVICE IS INTEGRATED WITH THE MICROINVERTER IN ACCORDANCE WITH NEC 690.41(B)

1.1.5 ALL PV SYSTEM COMPONENTS; MODULES, UTILITY-INTERACTIVE INVERTERS, AND SOURCE CIRCUIT COMBINER BOXES ARE IDENTIFIED AND LISTED FOR USE IN PHOTOVOLTAIC SYSTEMS AS REQUIRED BY NEC 690.4:
PV MODULES: UL1703, IEC61730, AND IEC61215, AND NFPA 70 CLASS C FIRE
INVERTERS: UL 1741 CERTIFIED, IEEE 1547, 929, 519
COMBINER BOX(ES): UL 1703 OR UL 1741 ACCESSORY

1.1.6 MAX DC VOLTAGE CALCULATED USING MANUFACTURER PROVIDED TEMP COEFFICIENT FOR VOC. IF UNAVAILABLE, MAX DC VOLTAGE CALCULATED ACCORDING TO NEC 690.7.

1.1.7 ALL INVERTERS, PHOTOVOLTAIC MODULES, PHOTOVOLTAIC PANELS, AND SOURCE CIRCUIT COMBINERS INTENDED FOR USE IN A PHOTOVOLTAIC POWER SYSTEM WILL BE IDENTIFIED AND LISTED FOR THE APPLICATION PER 690.4 (D). SHALL BE INSTALLED ACCORDING TO ANY INSTRUCTIONS FROM LISTING OR LABELING [NEC 110.3].

1.1.8 ALL SIGNAGE TO BE PLACED IN ACCORDANCE WITH LOCAL BUILDING CODE. IF EXPOSED TO SUNLIGHT, IT SHALL BE UV RESISTANT. ALL PLAQUES AND SIGNAGE WILL BE INSTALLED AS REQUIRED BY THE NEC AND AHJ.

1.2.1 **SCOPE OF WORK:**

1.2.2 PRIME CONTRACTOR IS RESPONSIBLE FOR THE DESIGN AND SPECIFICATIONS OF THE GRID-TIED PHOTOVOLTAIC SYSTEM RETROFIT. PRIME CONTRACTOR WILL BE RESPONSIBLE FOR COLLECTING EXISTING ONSITE REQUIREMENTS TO DESIGN, SPECIFY, AND INSTALL THE EXTERIOR ROOF-MOUNTED PORTION OF THE PHOTOVOLTAIC SYSTEMS DETAILED IN THIS DOCUMENT.

1.3.1 **WORK INCLUDES:**

1.3.2 PV ROOF ATTACHMENTS - ROOF TECH RT-MINI
1.3.3 PV RACKING SYSTEM INSTALLATION - IRONRIDGE XR-100
1.3.4 PV MODULE AND INVERTER INSTALLATION - HANWHA Q-CELLS Q.PEAK DUO XL-G10.3/BFG 475 / ENPHASE IQ8A-72-2-US
1.3.5 PV EQUIPMENT GROUNDING
1.3.6 PV SYSTEM WIRING TO A ROOF-MOUNTED JUNCTION BOX
1.3.7 PV LOAD CENTERS (IF INCLUDED)
1.3.8 PV METERING/MONITORING (IF INCLUDED)
1.3.9 PV DISCONNECTS
1.3.10 PV GROUNDING ELECTRODE & BONDING TO (E) GEC
1.3.11 PV FINAL COMMISSIONING
1.3.12 (E) ELECTRICAL EQUIPMENT RETROFIT FOR PV
1.3.13 SIGNAGE PLACED IN ACCORDANCE WITH LOCAL BUILDING CODE

SCOPE OF WORK

SYSTEM SIZE:	STC: 21 X 475W = 9.975KW PTC: 21 X 444.7W = 9.339KW (21) HANWHA Q-CELLS Q.PEAK DUO XL-G10.3/BFG 475 (21) ENPHASE IQ8A-72-2-US
ATTACHMENT TYPE:	ROOF TECH RT-MINI
MSP UPGRADE:	YES

01 AERIAL PHOTO
SCALE: NOT TO SCALE

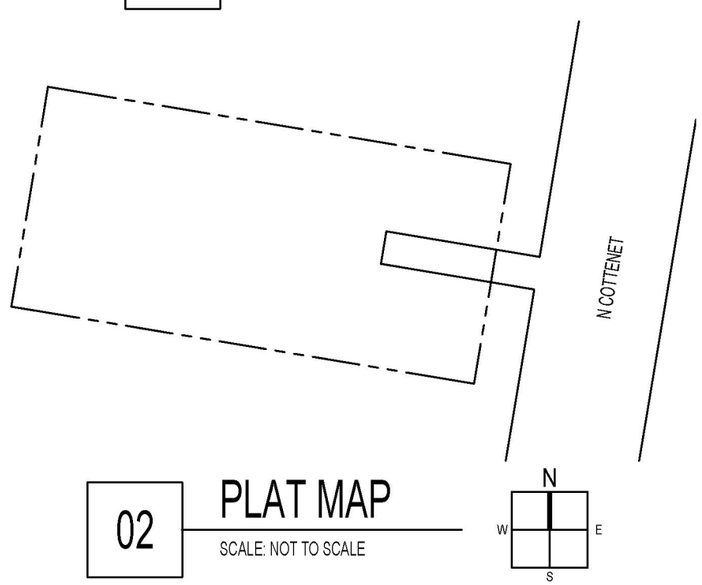

02 PLAT MAP
SCALE: NOT TO SCALE

SHEET LIST TABLE

SHEET NUMBER	SHEET TITLE
T-001	COVER PAGE
G-001	NOTES
A-101	SITE PLAN
A-102	ELECTRICAL PLAN
A-103	SOLAR ATTACHMENT PLAN
E-601	LINE DIAGRAM
E-602	DESIGN TABLES
E-603	PLACARDS
S-501	ASSEMBLY DETAILS
R-001	RESOURCE DOCUMENT
R-002	RESOURCE DOCUMENT
R-003	RESOURCE DOCUMENT
R-004	RESOURCE DOCUMENT
R-005	RESOURCE DOCUMENT
R-006	RESOURCE DOCUMENT
R-007	RESOURCE DOCUMENT

PROJECT INFORMATION

OWNER
NAME: ALAYNE KATZ

PROJECT MANAGER
NAME: ERIC EYGES
PHONE: 914-325-2167

CONTRACTOR
NAME: RIVERTOWN SOLAR LLC
PHONE: 914-325-2167

AUTHORITIES HAVING JURISDICTION
BUILDING: VILLAGE OF IRVINGTON
ZONING: VILLAGE OF IRVINGTON
UTILITY: CONSOLIDATED EDISON

DESIGN SPECIFICATIONS
OCCUPANCY: II
CONSTRUCTION: SINGLE-FAMILY
ZONING: RESIDENTIAL GRID-TIED
GROUND SNOW LOAD: 30 PSF
WIND EXPOSURE: B
WIND SPEED: 115 MPH

APPLICABLE CODES & STANDARDS
BUILDING: NYSBC 2020, NYSRC 2020
ELECTRICAL: NEC 2017
FIRE: NYSFC 2020

RIVERTOWN SOLAR

CONTRACTOR

RIVERTOWN SOLAR LLC

PHONE: 914-325-2167
ADDRESS: 64 MAIN STREET
IRVINGTON, NY10533

LIC. NO.: 52649
HIC. NO.:
ELE. NO.:

UNAUTHORIZED USE OF THIS DRAWING SET WITHOUT WRITTEN PERMISSION FROM CONTRACTOR IS IN VIOLATION OF U.S. COPYRIGHT LAWS AND WILL BE SUBJECT TO CIVIL DAMAGES AND PROSECUTIONS.

NEW PV SYSTEM: 9.975 kWp

KATZ RESIDENCE

13 N COTTENET
IRVINGTON, NY 10522
APN: 2.40-13-16

ENGINEER OF RECORD

STATE OF NEW YORK
JAMES A. CLANCY
084288
LICENSED PROFESSIONAL ENGINEER

PAPER SIZE 11" X 17" (ANSI B)

COVER PAGE

DATE: 09.16.2022
DESIGN BY: V.P.
CHECKED BY: M.M.

REVISIONS

T-001.00
(SHEET 1)

2.1.1 **SITE NOTES:**

2.1.2 A LADDER WILL BE IN PLACE FOR INSPECTION IN COMPLIANCE WITH OSHA REGULATIONS.

2.1.3 THE PV MODULES ARE CONSIDERED NON-COMBUSTIBLE AND THIS SYSTEM IS A UTILITY INTERACTIVE SYSTEM WITH STORAGE BATTERIES.

2.1.4 THE SOLAR PV INSTALLATION WILL NOT OBSTRUCT ANY PLUMBING, MECHANICAL, OR BUILDING ROOF VENTS.

2.1.5 PROPER ACCESS AND WORKING CLEARANCE AROUND EXISTING AND PROPOSED ELECTRICAL EQUIPMENT WILL BE PROVIDED AS PER SECTION NEC 110.26.

2.1.6 ROOF COVERINGS SHALL BE DESIGNED, INSTALLED, AND MAINTAINED IN ACCORDANCE WITH THIS CODE AND THE APPROVED MANUFACTURER'S INSTRUCTIONS SUCH THAT THE ROOF COVERING SERVES TO PROTECT THE BUILDING OR STRUCTURE.

2.2.1 **EQUIPMENT LOCATIONS:**

2.2.2 ALL EQUIPMENT SHALL MEET MINIMUM SETBACKS AS REQUIRED BY NEC 110.26.

2.2.3 WIRING SYSTEMS INSTALLED IN DIRECT SUNLIGHT MUST BE RATED FOR EXPECTED OPERATING TEMPERATURE AS SPECIFIED BY NEC 690.31 (A),(C) AND NEC TABLES 310.15 (B)(2)(A) AND 310.15 (B)(3)(C).

2.2.4 JUNCTION AND PULL BOXES PERMITTED INSTALLED UNDER PV MODULES ACCORDING TO NEC 690.34.

2.2.5 ADDITIONAL AC DISCONNECT(S) SHALL BE PROVIDED WHERE THE INVERTER IS NOT WITHIN SIGHT OF THE AC SERVICING DISCONNECT.

2.2.6 ALL EQUIPMENT SHALL BE INSTALLED ACCESSIBLE TO QUALIFIED PERSONNEL ACCORDING TO NEC APPLICABLE CODES.

2.2.7 ALL COMPONENTS ARE LISTED FOR THEIR PURPOSE AND RATED FOR OUTDOOR USAGE WHEN APPROPRIATE.

2.3.1 **STRUCTURAL NOTES:**

2.3.2 RACKING SYSTEM & PV ARRAY WILL BE INSTALLED ACCORDING TO CODE-COMPLIANT INSTALLATION MANUAL. TOP CLAMPS REQUIRE A DESIGNATED SPACE BETWEEN MODULES, AND RAILS MUST ALSO EXTEND A MINIMUM DISTANCE BEYOND EITHER EDGE OF THE ARRAY/SUBARRAY, ACCORDING TO RAI MANUFACTURER'S INSTRUCTIONS.

2.3.3 JUNCTION BOX WILL BE INSTALLED PER MANUFACTURERS' SPECIFICATIONS. IF ROOF-PENETRATING TYPE, IT SHALL BE FLASHED & SEALED PER LOCAL REQUIREMENTS.

2.3.4 ROOFTOP PENETRATIONS FOR PV RACEWAY WILL BE COMPLETED AND SEALED W/ APPROVED CHEMICAL SEALANT PER CODE BY A LICENSED CONTRACTOR.

2.3.5 ALL PV RELATED ROOF ATTACHMENTS TO BE SPACED NO GREATER THAN THE SPAN DISTANCE SPECIFIED BY THE RACKING MANUFACTURER.

2.3.6 WHEN POSSIBLE, ALL PV RELATED RACKING ATTACHMENTS WILL BE STAGGERED AMONGST THE ROOF FRAMING MEMBERS.

2.4.1 **WIRING & CONDUIT NOTES:**

2.4.2 ALL CONDUIT AND WIRE WILL BE LISTED AND APPROVED FOR THEIR PURPOSE. CONDUIT AND WIRE SPECIFICATIONS ARE BASED ON MINIMUM CODE REQUIREMENTS AND ARE NOT MEANT TO LIMIT UP-SIZING.

2.4.3 CONDUCTORS SIZED ACCORDING TO NEC 690.8, NEC 690.7.

2.4.4 VOLTAGE DROP LIMITED TO 1.5%.

2.4.5 DC WIRING LIMITED TO MODULE FOOTPRINT. MICROINVERTER WIRING SYSTEMS SHALL BE LOCATED AND SECURED UNDER THE ARRAY W/ SUITABLE WIRING CLIPS.

2.4.6 AC CONDUCTORS COLORED OR MARKED AS FOLLOWS:

PHASE A OR L1- BLACK

PHASE B OR L2- RED, OR OTHER CONVENTION IF THREE PHASE

PHASE C OR L3- BLUE, YELLOW, ORANGE**, OR OTHER CONVENTION

NEUTRAL- WHITE OR GRAY

IN 4-WIRE DELTA CONNECTED SYSTEMS THE PHASE WITH HIGHER VOLTAGE TO BE MARKED ORANGE [NEC 110.15].

4.5.1 **GROUNDING NOTES:**

2.5.2 GROUNDING SYSTEM COMPONENTS SHALL BE LISTED FOR THEIR PURPOSE, AND GROUNDING DEVICES EXPOSED TO THE ELEMENTS SHALL BE RATED FOR SUCH USE.

2.5.3 PV EQUIPMENT SHALL BE GROUNDED ACCORDING TO NEC 690.43 AND MINIMUM NEC TABLE 250.122.

2.5.4 METAL PARTS OF MODULE FRAMES, MODULE RACKING, AND ENCLOSURES CONSIDERED GROUNDED IN ACCORD WITH 250.134 AND 250.136(A).

2.5.5 EQUIPMENT GROUNDING CONDUCTORS SHALL BE SIZED ACCORDING TO NEC 690.45 AND MICROINVERTER MANUFACTURERS' INSTRUCTIONS.

2.5.6 EACH MODULE WILL BE GROUNDED USING WEEB GROUNDING CLIPS AS SHOWN IN MANUFACTURER DOCUMENTATION AND APPROVED BY THE AHJ. IF WEEBS ARE NOT USED, MODULE GROUNDING LUGS MUST BE INSTALLED AT THE SPECIFIED GROUNDING LUG HOLES PER THE MANUFACTURERS' INSTALLATION REQUIREMENTS.

2.5.7 THE GROUNDING CONNECTION TO A MODULE SHALL BE ARRANGED SUCH THAT THE REMOVAL OF A MODULE DOES NOT INTERRUPT A GROUNDING CONDUCTOR TO ANOTHER MODULE.

2.5.8 GROUNDING AND BONDING CONDUCTORS, IF INSULATED, SHALL BE COLORED GREEN OR MARKED GREEN IF #4 AWG OR LARGER [NEC 250.119]

2.5.9 THE GROUNDING ELECTRODE SYSTEM COMPLIES WITH NEC 690.47 AND NEC 250.50 THROUGH 250.106. IF EXISTING SYSTEM IS INACCESSIBLE, OR INADEQUATE, A GROUNDING ELECTRODE SYSTEM PROVIDED ACCORDING TO NEC 250, NEC 690.47 AND AHJ.

2.5.10 GROUND-FAULT DETECTION SHALL COMPLY WITH NEC 690.41(B)(1) AND (2) TO REDUCE FIRE HAZARDS

2.6.1 **DISCONNECTION AND OVER-CURRENT PROTECTION NOTES:**

2.6.2 DISCONNECTING SWITCHES SHALL BE WIRED SUCH THAT WHEN THE SWITCH IS OPENED THE CONDUCTORS REMAINING ENERGIZED ARE CONNECTED TO THE TERMINALS MARKED "LINE SIDE" (TYPICALLY THE UPPER TERMINALS).

2.6.3 DISCONNECTS TO BE ACCESSIBLE TO QUALIFIED UTILITY PERSONNEL, BE LOCKABLE, AND BE A VISIBLE-BREAK SWITCH

2.6.4 PV SYSTEM CIRCUITS INSTALLED ON OR IN BUILDINGS SHALL INCLUDE A RAPID SHUTDOWN FUNCTION TO REDUCE SHOCK HAZARD FOR EMERGENCY RESPONDERS IN ACCORDANCE WITH 690.12(A) THROUGH (D).

2.6.5 ALL OCPD RATINGS AND TYPES SPECIFIED ACCORDING TO NEC 690.8, 690.9, AND 240.

2.6.6 MICROINVERTER BRANCHES CONNECTED TO A SINGLE BREAKER OR GROUPED FUSES IN ACCORDANCE WITH NEC 110.3(B).

2.6.7 IF REQUIRED BY AHJ, SYSTEM WILL INCLUDE ARC-FAULT CIRCUIT PROTECTION ACCORDING TO NEC 690.11 AND UL1699B.

2.7.1 **INTERCONNECTION NOTES:**

2.7.2 LOAD-SIDE INTERCONNECTION SHALL BE IN ACCORDANCE WITH [NEC 705.12 (B)]

2.7.3 THE SUM OF THE UTILITY OCPD AND INVERTER CONTINUOUS OUTPUT MAY NOT EXCEED 120% OF BUSBAR RATING [NEC 705.12(D)(2)(3)].

2.7.4 THE SUM OF 125 PERCENT OF THE POWER SOURCE(S) OUTPUT CIRCUIT CURRENT AND THE RATING OF THE OVERCURRENT DEVICE PROTECTING THE BUSBAR SHALL NOT EXCEED 120 PERCENT OF THE AMPACITY OF THE BUSBAR, PV DEDICATED BACKFEED BREAKERS MUST BE LOCATED OPPOSITE END OF THE BUS FROM THE UTILITY SOURCE OCPD [NEC 705.12(B)(2)(3)].

2.7.5 AT MULTIPLE ELECTRIC POWER SOURCES OUTPUT COMBINER PANEL, TOTAL RATING OF ALL OVERCURRENT DEVICES SHALL NOT EXCEED AMPACITY OF BUSBAR. HOWEVER, THE COMBINED OVERCURRENT DEVICE MAY BE EXCLUDED ACCORDING TO NEC 705.12 (B)(2)(3)(C).

2.7.6 FEEDER TAP INTERCONNECTION (LOAD SIDE) ACCORDING TO NEC 705.12 (B)(2)(1)

2.7.7 SUPPLY SIDE TAP INTERCONNECTION ACCORDING TO NEC 705.12 (A) WITH SERVICE ENTRANCE CONDUCTORS IN ACCORDANCE WITH NEC 230.42

2.7.8 BACKFEEDING BREAKER FOR ELECTRIC POWER SOURCES OUTPUT IS EXEMPT FROM ADDITIONAL FASTENING [NEC 705.12 (B)(5)].

RIVERTOWN SOLAR

CONTRACTOR

RIVERTOWN SOLAR LLC

PHONE: 914-325-2167
ADDRESS: 64 MAIN STREET
IRVINGTON, NY10533

LIC. NO.: 52649
HIC. NO.:
ELE. NO.:

UNAUTHORIZED USE OF THIS DRAWING SET WITHOUT WRITTEN PERMISSION FROM CONTRACTOR IS IN VIOLATION OF U.S. COPYRIGHT LAWS AND WILL BE SUBJECT TO CIVIL DAMAGES AND PROSECUTIONS.

NEW PV SYSTEM: 9.975 kWp

KATZ RESIDENCE

13 N COTTENET
IRVINGTON, NY 10522
APN: 2.40-13-16

ENGINEER OF RECORD

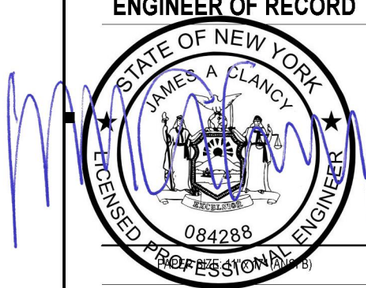

NOTES

DATE: 09.16.2022
DESIGN BY: V.P.
CHECKED BY: M.M.

REVISIONS

G-001.00
(SHEET 2)

GENERAL NOTES

1. FIELD VERIFY ALL MEASUREMENTS
2. ITEMS BELOW MAY NOT BE ON THIS PAGE

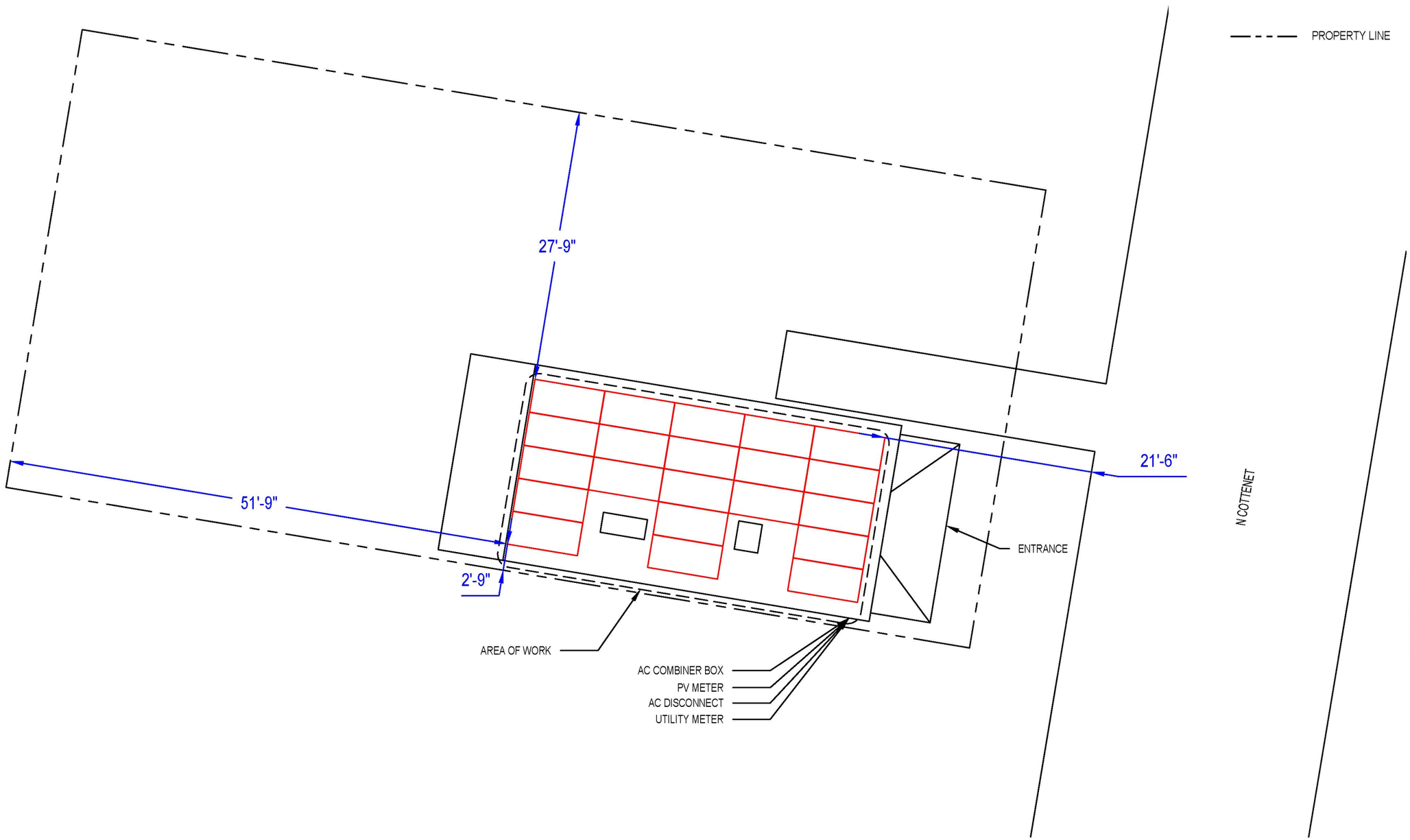

01 SITE PLAN

3/32" = 1'-0"

0 5'-4" 10'-8"

N W E S

RIVERTOWN SOLAR

CONTRACTOR

RIVERTOWN SOLAR LLC

PHONE: 914-325-2167
ADDRESS: 64 MAIN STREET
IRVINGTON, NY10533

LIC. NO.: 52649
HIC. NO.:
ELE. NO.:

UNAUTHORIZED USE OF THIS DRAWING SET WITHOUT WRITTEN PERMISSION FROM CONTRACTOR IS IN VIOLATION OF U.S. COPYRIGHT LAWS AND WILL BE SUBJECT TO CIVIL DAMAGES AND PROSECUTIONS.

NEW PV SYSTEM: 9.975 kWp

KATZ RESIDENCE

13 N COTTENET
IRVINGTON, NY 10522
APN: 2.40-13-16

ENGINEER OF RECORD

STATE OF NEW YORK
JAMES A CLANCY
084288
LICENSED PROFESSIONAL ENGINEER

PAPER SIZE 11" X 17" (ANSI B)

SITE PLAN

DATE: 09.16.2022
DESIGN BY: V.P.
CHECKED BY: M.M.

REVISIONS

A-101.00
(SHEET 3)

GENERAL NOTES

1. FIELD VERIFY ALL MEASUREMENTS
2. ITEMS BELOW MAY NOT BE ON THIS PAGE

FIRE CLEARANCE

(A) MODULE STRINGING

(B) MODULE STRINGING

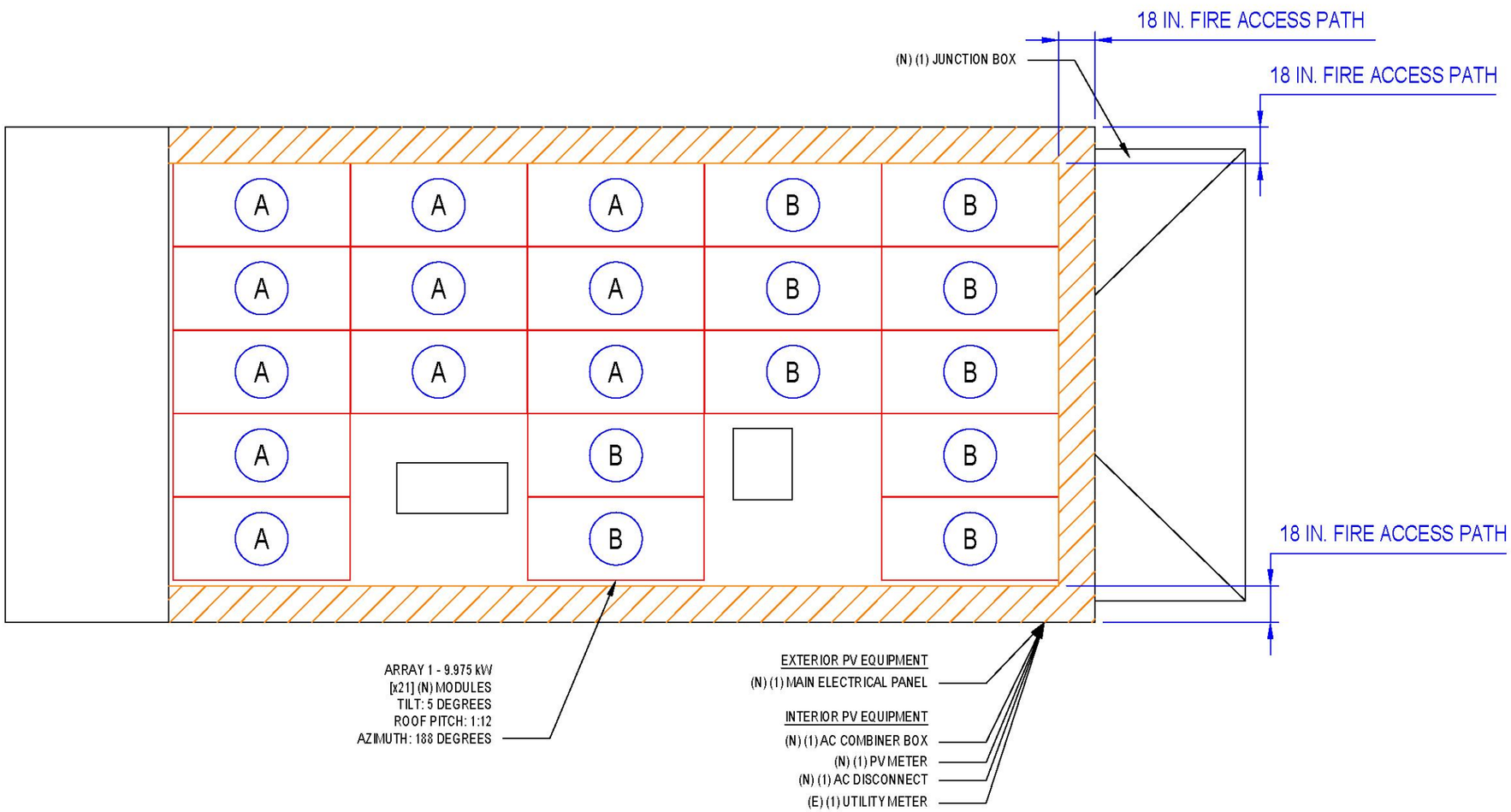

01 ELECTRICAL PLAN

3/16" = 1'-0"

0 2'-8" 5'-4"

N W E S

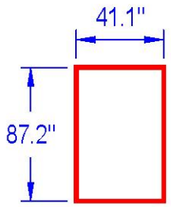

MODULE:
HANWHA Q-CELLS
Q.PEAK DUO XL-G10.3/BFG 475
475 WATTS

RIVERTOWN SOLAR

CONTRACTOR

RIVERTOWN SOLAR LLC

PHONE: 914-325-2167
ADDRESS: 64 MAIN STREET
IRVINGTON, NY10533

LIC. NO.: 52649
HIC. NO.:
ELE. NO.:

UNAUTHORIZED USE OF THIS DRAWING SET WITHOUT WRITTEN PERMISSION FROM CONTRACTOR IS IN VIOLATION OF U.S. COPYRIGHT LAWS AND WILL BE SUBJECT TO CIVIL DAMAGES AND PROSECUTIONS.

NEW PV SYSTEM: 9.975 kWp

KATZ RESIDENCE

13 N COTTENET
IRVINGTON, NY 10522
APN: 2.40-13-16

ENGINEER OF RECORD

PAPER SIZE: 11" x 17" (ANSI B)

ELECTRICAL PLAN

DATE: 09.16.2022
DESIGN BY: V.P.
CHECKED BY: M.M.

REVISIONS

A-102.00
(SHEET 4)

GENERAL NOTES

1. FIELD VERIFY ALL MEASUREMENTS
2. ITEMS BELOW MAY NOT BE ON THIS PAGE

– – – – – ROOF RAFTERS

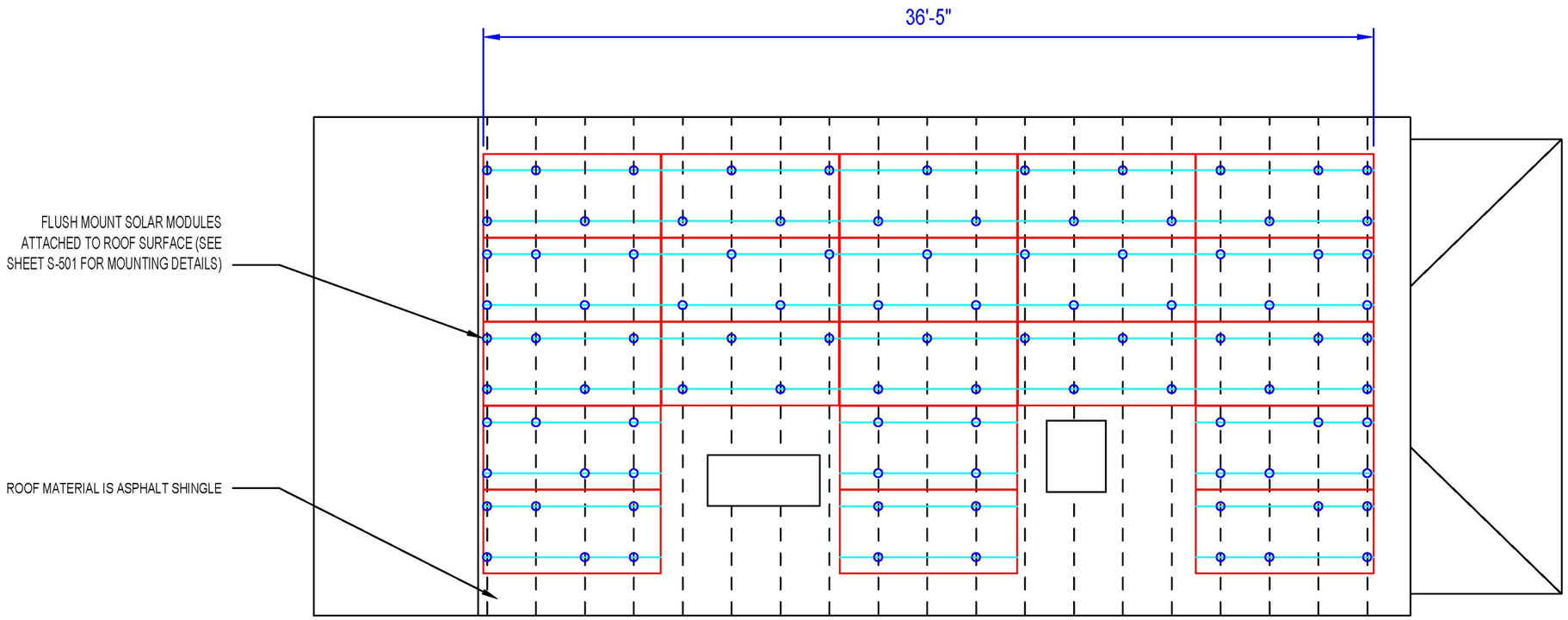

01 SOLAR ATTACHMENT PLAN

3/16" = 1'-0"

0 2'-8" 5'-4"

N E S W

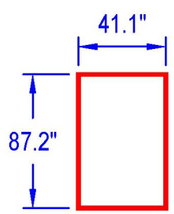

MODULE:
HANWHA Q-CELLS
Q.PEAK DUO XL-G10.3/BFG 475
475 WATTS

RIVERTOWN SOLAR

CONTRACTOR

RIVERTOWN SOLAR LLC

PHONE: 914-325-2167
ADDRESS: 64 MAIN STREET
IRVINGTON, NY10533

LIC. NO.: 52649
HIC. NO.:
ELE. NO.:

UNAUTHORIZED USE OF THIS DRAWING SET WITHOUT WRITTEN PERMISSION FROM CONTRACTOR IS IN VIOLATION OF U.S. COPYRIGHT LAWS AND WILL BE SUBJECT TO CIVIL DAMAGES AND PROSECUTIONS.

NEW PV SYSTEM: 9.975 kWp

KATZ RESIDENCE

13 N COTTENET
IRVINGTON, NY 10522
APN: 2.40-13-16

ENGINEER OF RECORD

STATE OF NEW YORK
JAMES A CLANCY
084288
LICENSED PROFESSIONAL ENGINEER

SOLAR ATTACHMENT PLAN

DATE: 09.16.2022
DESIGN BY: V.P.
CHECKED BY: M.M.

REVISIONS

A-103.00
(SHEET 5)

CONDUCTOR AND CONDUIT SCHEDULE W/ELECTRICAL CALCULATIONS														
ID	TYPICAL	CONDUCTOR	CONDUIT	CURRENT-CARRYING CONDUCTORS IN CONDUIT	OCPD	EGC	TEMP. CORR. FACTOR	CONDUIT FILL FACTOR	CONT. CURRENT	MAX. CURRENT (125%)	BASE AMP.	DERATED AMP.	TERM. TEMP. RATING	AMP. @ TERMINAL
1	1	10 AWG THWN-2, COPPER	0.75" DIA EMT	4	20A	8 AWG THWN-2, COPPER	0.96 (32.4 °C)	0.8	15.95A	19.94A	40A	30.72A	75°C	35A
2	1	8 AWG THWN-2, COPPER	0.75" DIA EMT	2	N/A	8 AWG THWN-2, COPPER	0.96 (32.4 °C)	1	30.45A	38.06A	55A	52.8A	75°C	50A
3	1	8 AWG THWN-2, COPPER	0.75" DIA EMT	2	N/A	8 AWG THWN-2, COPPER	0.96 (32.4 °C)	1	30.45A	38.06A	55A	52.8A	75°C	50A
4	1	8 AWG THWN-2, COPPER	0.75" DIA EMT	2	40A	8 AWG THWN-2, COPPER	0.96 (32.4 °C)	1	30.45A	38.06A	55A	52.8A	75°C	50A

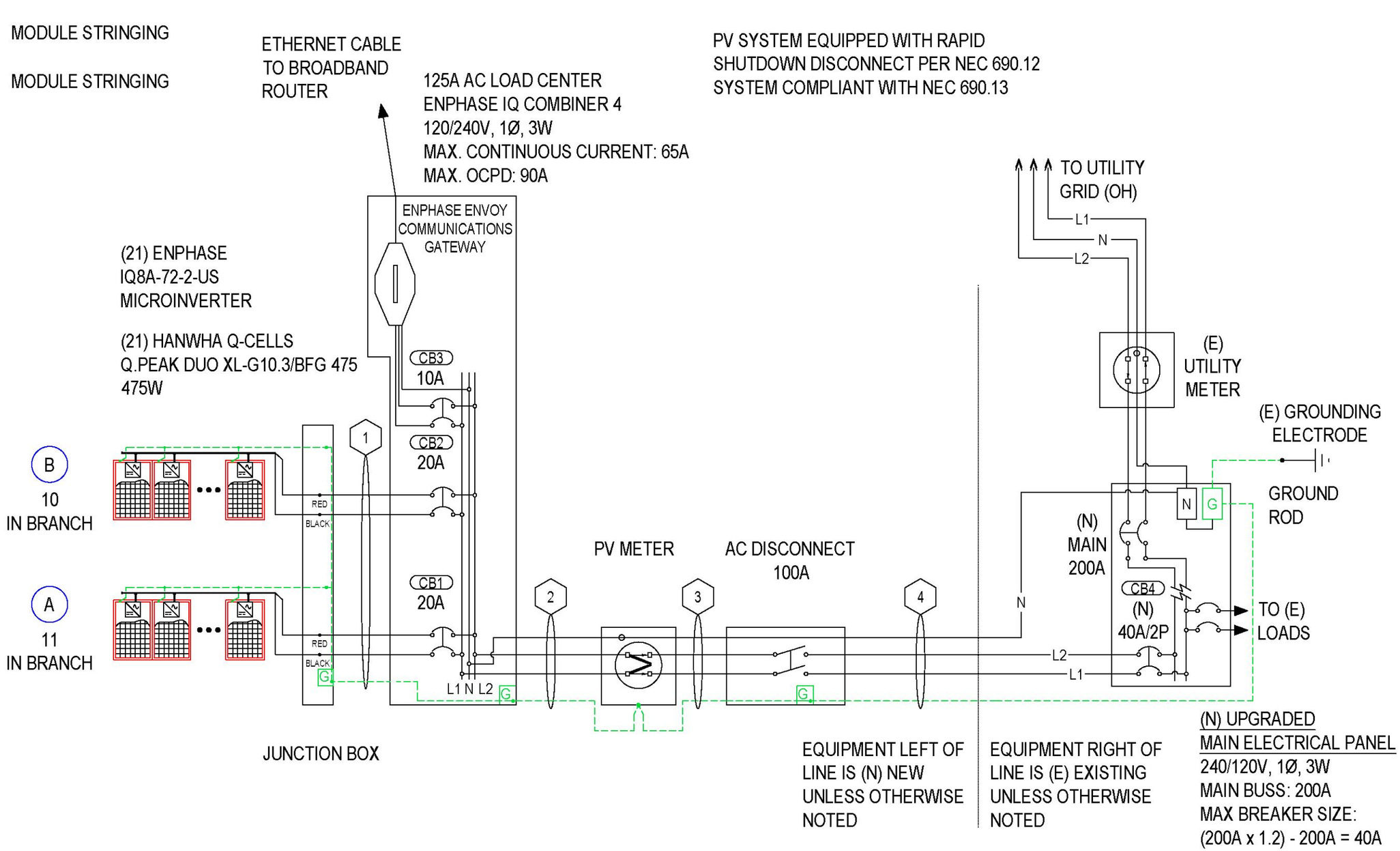

RIVERTOWN SOLAR

CONTRACTOR

RIVERTOWN SOLAR LLC

PHONE: 914-325-2167
ADDRESS: 64 MAIN STREET
IRVINGTON, NY10533

LIC. NO.: 52649
HIC. NO.:
ELE. NO.:

UNAUTHORIZED USE OF THIS DRAWING SET WITHOUT WRITTEN PERMISSION FROM CONTRACTOR IS IN VIOLATION OF U.S. COPYRIGHT LAWS AND WILL BE SUBJECT TO CIVIL DAMAGES AND PROSECUTIONS.

NEW PV SYSTEM: 9.975 kWp

KATZ RESIDENCE

13 N COTTENET
IRVINGTON, NY 10522
APN: 2.40-13-16

ENGINEER OF RECORD

PAPER SIZE: 11" x 17" (ANSI B)

LINE DIAGRAM

DATE: 09.16.2022
DESIGN BY: V.P.
CHECKED BY: M.M.

REVISIONS

E-601.00
(SHEET 6)

SYSTEM SUMMARY		
	BRANCH #1	BRANCH #2
INVERTERS PER BRANCH	11	10
MAX AC CURRENT	15.95A	14.5A
MAX AC OUTPUT POWER	4,026W	3,660W
ARRAY STC POWER	9,975W	
ARRAY PTC POWER	9,339W	
MAX AC CURRENT	30.45A	
MAX AC POWER	7,686W	
DERATED (CEC) AC POWER	7,686W	

MODULES

REF.	QTY.	MAKE AND MODEL	PMAX	PTC	ISC	IMP	VOC	VMP	TEMP. COEFF. OF VOC	FUSE RATING
PM1-21	21	HANWHA Q-CELLS Q.PEAK DUO XL-G10.3/BFG 475	475W	444.7W	11.08A	10.55A	53.15V	45.03V	-0.144V/°C (-0.27%/°C)	20A

INVERTERS

REF.	QTY.	MAKE AND MODEL	AC VOLTAGE	GROUND	OCPD RATING	RATED POWER	MAX OUTPUT CURRENT	MAX INPUT CURRENT	MAX INPUT VOLTAGE	CEC WEIGHTED EFFICIENCY
I1-21	21	ENPHASE IQ8A-72-2-US	240V	FLOATING	20A	349W	1.45A	15A	60V	97.5%

DISCONNECTS

REF.	QTY.	MAKE AND MODEL	RATED CURRENT	MAX RATED VOLTAGE
SW1	1	SQUARE D DU323RB OR EQUIV.	100A	240VAC

OCPDS

REF.	QTY.	RATED CURRENT	MAX VOLTAGE
CB1-2	2	20A	240VAC
CB3	1	10A	240VAC
CB4	1	40A	240VAC

ASHRAE EXTREME LOW	-19.7°C (-3.5°F), SOURCE: WESTCHESTER CO (41.07°; -73.71°)
ASHRAE 2% HIGH	32.4°C (90.3°F), SOURCE: WESTCHESTER CO (41.07°; -73.71°)

BILL OF MATERIALS

CATEGORY	MAKE	MODEL NUMBER	REF	QTY	UNIT	QTY/UNIT	DESCRIPTION
MODULE	HANWHA Q-CELLS	Q.PEAK DUO XL-G10.3/BFG 475	PM1-21	21	PIECES	1	HANWHA Q-CELLS Q.PEAK DUO XL-G10.3/BFG 475 475W
INVERTER	ENPHASE	IQ8A-72-2-US	I1-21	21	PIECES	1	ENPHASE IQ8A-72-2-US 349W INVERTER
DISCONNECT	SQUARE D	DU323RB	SW1	1	PIECE	1	SQUARE D DU323RB, NON FUSED, 2-POLE, 100A, 240VAC OR EQUIVALENT
PRODUCTION METER	GENERIC MANUFACTURER	GEN-METER-80A	M1	1	PIECE	1	ELECTRICAL METER, OWNER APPROVED
MISC ELECTRICAL EQUIPMENT		GEN-CABLE-CLIP	HDWR24-129	105	PIECES	1	GENERIC CABLE CLIP
AC COMBINER PANEL		ENPHASE-IQ4-PANEL	EP1	1	PIECE	1	ENPHASE IQ COMBINER 4 (X-IQ-AM1-240-4)
WIRING	ENPHASE	Q-12-20-200	EN1-21	21	PIECES	1	ENPHASE ENGAGE (TM) TRUNK CABLE
WIRING	ENPHASE	Q-TERM-10	EN22	1	BUNDLE	10	ENPHASE ENGAGE (TM) BRANCH TERMINATOR
WIRING	ENPHASE	Q-SEAL-10	EN23	1	BUNDLE	10	ENPHASE ENGAGE (TM) WATERTIGHT SEALING CAP
WIRING		GEN-10-AWG-THWN-2-CU-RD	WR1	90	FEET	1	10 AWG THWN-2, COPPER, RED (LINE 1)
WIRING		GEN-10-AWG-THWN-2-CU-BLK	WR1	90	FEET	1	10 AWG THWN-2, COPPER, BLACK (LINE 2)
WIRING		GEN-8-AWG-THWN-2-CU-RD	WR2-4	30	FEET	1	8 AWG THWN-2, COPPER, RED (LINE 1)
WIRING		GEN-8-AWG-THWN-2-CU-BLK	WR2-4	30	FEET	1	8 AWG THWN-2, COPPER, BLACK (LINE 2)
WIRING		GEN-8-AWG-THWN-2-CU-WH	WR2-4	30	FEET	1	8 AWG THWN-2, COPPER, WHITE (NEUTRAL)
WIRING		GEN-8-AWG-THWN-2-CU-GR	WR1-4	75	FEET	1	8 AWG THWN-2, COPPER, GREEN (GROUND)
WIREWAY	ENPHASE	ET-SPLK-05	EN5	1	BUNDLE	5	ENPHASE ENGAGE (TM) ENGAGE COUPLER
WIREWAY		GEN-EMT-0.75" DIA	WW1-4	75	FEET	1	EMT CONDUIT, 0.75" DIA
OCPD	GENERIC MANUFACTURER	GEN-CB-20A-240VAC	CB1-2	2	PIECES	1	CIRCUIT BREAKER, 20A, 240VAC
OCPD	GENERIC MANUFACTURER	GEN-CB-10A-240VAC	CB3	1	PIECE	1	CIRCUIT BREAKER, 10A, 240VAC
OCPD	GENERIC MANUFACTURER	GEN-CB-40A-240VAC	CB4	1	PIECE	1	CIRCUIT BREAKER, 40A, 240VAC
TRANSITION BOX	GENERIC MANUFACTURER	GEN-AWB-TB-4-4X	JB1	1	PIECE	1	TRANSITION/PASS-THROUGH BOX, WITH 4 TERMINAL BLOCKS

RIVERTOWN SOLAR

CONTRACTOR

RIVERTOWN SOLAR LLC

PHONE: 914-325-2167
ADDRESS: 64 MAIN STREET
IRVINGTON, NY10533

LIC. NO.: 52649
HIC. NO.:
ELE. NO.:

UNAUTHORIZED USE OF THIS DRAWING SET WITHOUT WRITTEN PERMISSION FROM CONTRACTOR IS IN VIOLATION OF U.S. COPYRIGHT LAWS AND WILL BE SUBJECT TO CIVIL DAMAGES AND PROSECUTIONS.

NEW PV SYSTEM: 9.975 kWp

KATZ RESIDENCE

13 N COTTENET
IRVINGTON, NY 10522
APN: 2.40-13-16

ENGINEER OF RECORD

PAPER SIZE: 11" x 17" (ANSI B)

DESIGN TABLES

DATE: 09.16.2022
DESIGN BY: V.P.
CHECKED BY: M.M.

REVISIONS

E-602.00
(SHEET 7)

LABELING NOTES
1.1 LABELING REQUIREMENTS BASED ON THE 2017 NATIONAL ELECTRICAL CODE, INTERNATIONAL FIRE CODE 605.11, OSHA STANDARD 1910.145, ANSI Z535
1.2 MATERIAL BASED ON THE REQUIREMENTS OF THE AUTHORITY HAVING JURISDICTION.
1.3 LABELS TO BE OF SUFFICIENT DURABILITY TO WITHSTAND THE ENVIRONMENT INVOLVED.
1.4 LABELS TO BE A MINIMUM LETTER HEIGHT OF 3/8" AND PERMANENTLY AFFIXED.
1.5 ALERTING WORDS TO BE COLOR CODED. "DANGER" WILL HAVE RED BACKGROUND; "WARNING" WILL HAVE ORANGE BACKGROUND; "CAUTION" WILL HAVE YELLOW BACKGROUND. [ANSI Z535]

⚠ WARNING
ELECTRICAL SHOCK HAZARD
TERMINALS ON THE LINE AND LOAD SIDES MAY BE ENERGIZED IN THE OPEN POSITION

LABEL 1
AT EACH DISCONNECTING MEANS FOR PHOTOVOLTAIC EQUIPMENT (2" X 4").
[NEC 690.13].

⚠ WARNING
POWER SOURCE OUTPUT CONNECTION DO NOT RELOCATE THIS OVERCURRENT DEVICE

LABEL 2
AT POINT OF INTERCONNECTION OVERCURRENT DEVICE (2" X 4").
[NEC 705.12(B)(2)(3)(B)].

PHOTOVOLTAIC SYSTEM AC DISCONNECT
RATED AC OUTPUT CURRENT 30.45 A
NOMINAL OPERATING AC VOLTAGE 240 V

LABEL 3
AT POINT OF INTERCONNECTION, MARKED AT DISCONNECTING MEANS (4" X 2").
[NEC 690.54]

PHOTOVOLTAIC SOLAR AC DISCONNECT

LABEL 4
AT EACH AC DISCONNECTING MEANS (4" X 1").
[NEC 690.13(B)].

RAPID SHUTDOWN SWITCH FOR SOLAR PV SYSTEM

LABEL 5
AT RAPID SHUTDOWN DISCONNECT SWITCH (5 1/4" X 2").
[NEC 690.56(C)(3)].

SOLAR PV SYSTEM EQUIPPED WITH RAPID SHUTDOWN

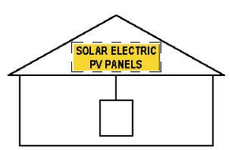

TURN RAPID SHUTDOWN SWITCH TO THE "OFF" POSITION TO SHUT DOWN PV SYSTEM AND REDUCE SHOCK HAZARD IN ARRAY

LABEL 6
AT RAPID SHUTDOWN SYSTEM (3 3/4" X 5 1/4"). [NEC 690.56(C)(1)(A)].

⚠ WARNING
DUAL POWER SUPPLY
SOURCES: UTILITY GRID AND PV SOLAR ELECTRIC SYSTEM

LABEL 7
AT POINT OF INTERCONNECTION (2 3/4" X 1 5/8").
[NEC 705.12(B)(3)]

⚠ WARNING
SOLAR ELECTRIC CIRCUIT BREAKER IS BACKFED

LABEL 8
AT POINT OF INTERCONNECTION (2" X 1").
[NEC 705.12(B)(3)]

INTERACTIVE PHOTOVOLTAIC SYSTEM CONNECTED
PHOTOVOLTAIC SYSTEM DISCONNECT LOCATED SOUTH SIDE OF THE HOUSE

DIRECTORY
PERMANENT PLAQUE OR DIRECTORY PROVIDING THE LOCATION OF THE SERVICE DISCONNECTING MEANS AND THE PHOTOVOLTAIC SYSTEM DISCONNECTING MEANS IF NOT IN THE SAME LOCATION (5 3/4" X 1 1/8").
[NEC 690.56(B)]

WHERE THE PV SYSTEMS ARE REMOTELY LOCATED FROM EACH OTHER, A DIRECTORY IN ACCORDANCE WITH 705.10 SHALL BE PROVIDED AT EACH PV SYSTEM DISCONNECTING MEANS.
PV SYSTEM EQUIPMENT AND DISCONNECTING MEANS SHALL NOT BE INSTALLED IN BATHROOMS
[NEC 690.4(D),(E)]

WARNING: PHOTOVOLTAIC POWER SOURCE

LABEL 9
AT EXPOSED RACEWAYS, CABLE TRAYS, AND OTHER WIRING METHODS; SPACED AT MAXIMUM 10 FT SECTION OR WHERE SEPARATED BY ENCLOSURES, WALLS, PARTITIONS, CEILINGS, OR FLOORS (5 3/4" X 1 1/8").
[NEC 690.31(G)]
LETTERS AT LEAST 3/8 INCH; WHITE ON RED BACKGROUND; REFLECTIVE
[IFC 605.11.1.1]

⚠ CAUTION
SOLAR ELECTRIC SYSTEM CONNECTED

LABEL 10
AT UTILITY METER (5 3/4" X 1 1/8")
[NEC 690.56(B)]

!CAUTION!

POWER TO THIS BUILDING IS ALSO SUPPLIED FROM ROOF MOUNTED SOLAR ARRAYS WITH SAFETY DISCONNECTS AS SHOWN:

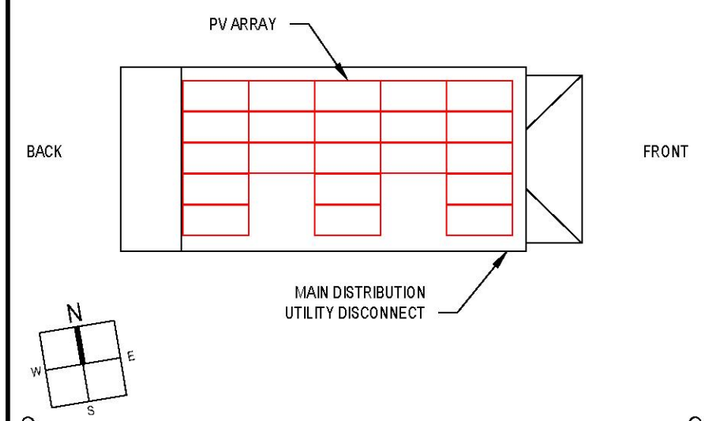

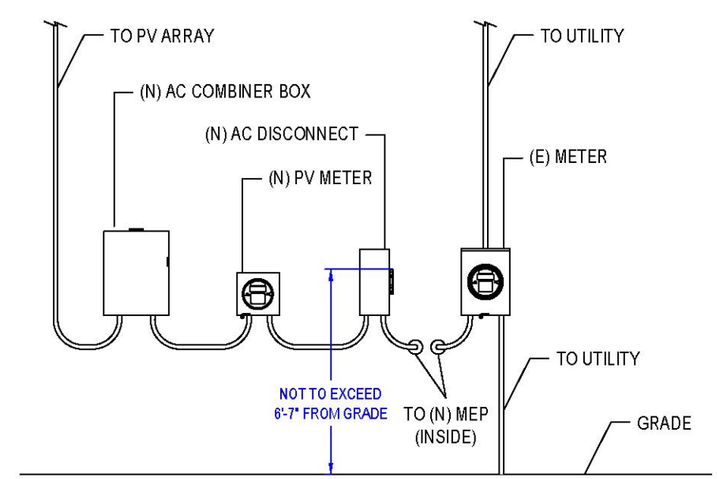

01 EQUIPMENT ELEVATION
SCALE: NOT TO SCALE

RIVERTOWN SOLAR

CONTRACTOR

RIVERTOWN SOLAR LLC

PHONE: 914-325-2167
ADDRESS: 64 MAIN STREET IRVINGTON, NY10533

LIC. NO.: 52649
HIC. NO.:
ELE. NO.:

UNAUTHORIZED USE OF THIS DRAWING SET WITHOUT WRITTEN PERMISSION FROM CONTRACTOR IS IN VIOLATION OF U.S. COPYRIGHT LAWS AND WILL BE SUBJECT TO CIVIL DAMAGES AND PROSECUTIONS.

NEW PV SYSTEM: 9.975 kWp

KATZ RESIDENCE

13 N COTTENET
IRVINGTON, NY 10522
APN: 2.40-13-16

ENGINEER OF RECORD

PAPER SIZE: 11" x 17" (ANSI B)

PLACARDS

DATE: 09.16.2022
DESIGN BY: V.P.
CHECKED BY: M.M.

REVISIONS

E-603.00
(SHEET 8)

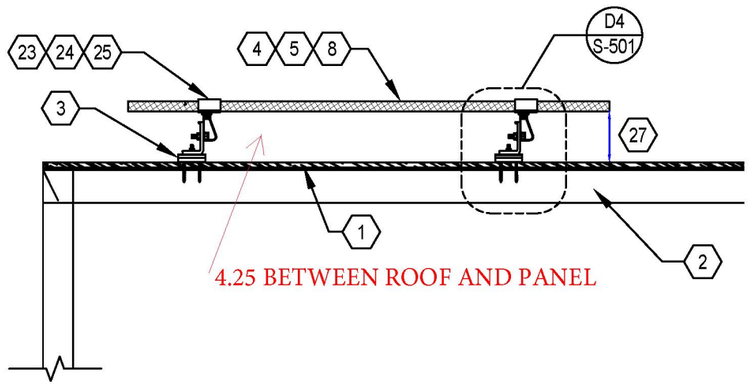

D1 RACKING DETAIL (TRANSVERSE)

SCALE: NOT TO SCALE

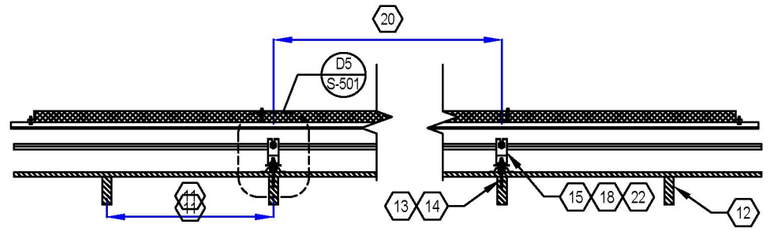

D2 RACKING DETAIL (LONGITUDINAL)

SCALE: NOT TO SCALE

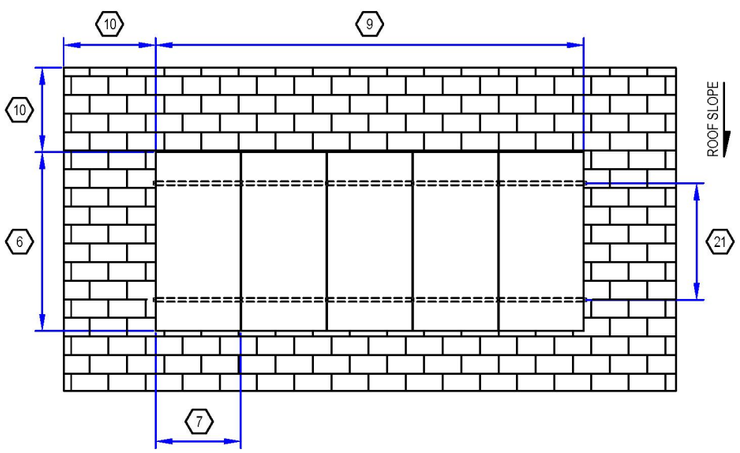

D3 RACKING DETAIL (TOP)

SCALE: NOT TO SCALE

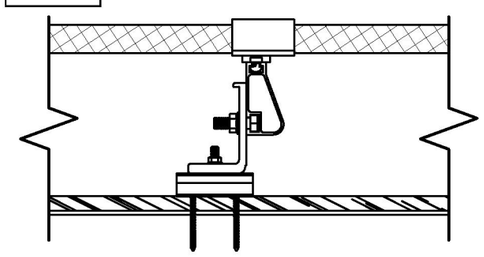

D4 DETAIL (TRANSVERSE)

SCALE: NOT TO SCALE

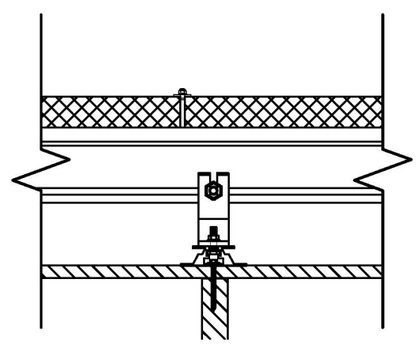

D5 DETAIL (LONGITUDINAL)

SCALE: NOT TO SCALE

GENERAL NOTES

1. FIELD VERIFY ALL MEASUREMENTS
2. ITEMS BELOW MAY NOT BE ON THIS PAGE

SHEET KEYNOTES

1. ROOF MATERIAL: ASPHALT SHINGLE
2. ROOF STRUCTURE: SINGLE SPAN RAFTER
3. ATTACHMENT TYPE: ROOF TECH RT-MINI
4. MODULE MANUFACTURER: HANWHA Q-CELLS
5. MODULE MODEL: Q.PEAK DUO XL-G10.3/BFG 475
6. MODULE LENGTH: 87.2 IN.
7. MODULE WIDTH: 41.1 IN.
8. MODULE WEIGHT: 62.4 LBS.
9. SEE SHEET A-103 FOR DIMENSION(S)
10. MIN. FIRE OFFSET: 18" FROM RIDGE, 36" FROM EDGE
11. RAFTER SPACING: 24 IN. O.C.
12. RAFTER SIZE: 2X8 IN. NOMINAL
13. LAG BOLT DIAMETER: BOLT/SCREW SUPPLIED WITH RACKING
14. LAG BOLT EMBEDMENT: PER RACKING MFG SPECIFICATIONS
15. TOTAL # OF ATTACHMENTS: 95
16. TOTAL AREA: 522.66 SQ. FT.
17. TOTAL WEIGHT: 1605.72 LBS.
18. WEIGHT PER ATTACHMENT: 16.9 LBS.
19. DISTRIBUTED LOAD: 3.07 PSF.
20. MAX. HORIZONTAL STANDOFF: 48 IN.
21. MAX. VERTICAL STANDOFF: IN ACCORDANCE WITH MODULE MANUFACTURER'S INSTRUCTIONS
22. STANDOFF STAGGERING: YES
23. RAIL MANUFACTURER (OR EQUIV.): IRONRIDGE
24. RAIL MODEL (OR EQUIVALENT): XR-100
25. RAIL WEIGHT: 0.68 PLF.
26. MAX. RAFTER SPAN: 20 FT.
27. MODULE CLEARANCE: 3 IN. MIN., 6 IN. MAX

RIVERTOWN SOLAR

CONTRACTOR

RIVERTOWN SOLAR LLC

PHONE: 914-325-2167
ADDRESS: 64 MAIN STREET
IRVINGTON, NY10533

LIC. NO.: 52649
HIC. NO.:
ELE. NO.:

UNAUTHORIZED USE OF THIS DRAWING SET WITHOUT WRITTEN PERMISSION FROM CONTRACTOR IS IN VIOLATION OF U.S. COPYRIGHT LAWS AND WILL BE SUBJECT TO CIVIL DAMAGES AND PROSECUTIONS.

NEW PV SYSTEM: 9.975 kWp

KATZ RESIDENCE

13 N COTTENET
IRVINGTON, NY 10522
APN: 2.40-13-16

ENGINEER OF RECORD

STATE OF NEW YORK
JAMES A. CLANCY
084288
LICENSED PROFESSIONAL ENGINEER

PAPER SIZE 11" X 17" (ANSI B)

ASSEMBLY DETAILS

DATE: 09.16.2022
DESIGN BY: V.P.
CHECKED BY: M.M.

REVISIONS

S-501.00
(SHEET 9)

powered by Q.ANTUM DUO Z

Q.PEAK DUO XL-G10.3 / BFG

475-490

BIFACIAL DOUBLE GLASS MODULE WITH EXCELLENT RELIABILITY AND ADDITIONAL YIELD

Quality Controlled PV
TÜVRheinland CERTIFIED
www.tuv.com ID 1111232615

EUPD RESEARCH TOP BRAND PV MODULES EUROPE 2021

Q CELLS Yield Security

BIFACIAL ENERGY YIELD GAIN OF UP TO 20 %

Bifacial Q.ANTUM solar cells with zero gap cell layout make efficient use of light shining on the module rear-side for radically improved LCOE.

LOW ELECTRICITY GENERATION COSTS

Q.ANTUM DUO Z combines cutting edge cell separation and innovative wiring with Q.ANTUM Technology for higher yield per surface area, lower BOS costs, higher power classes, and an efficiency rate of up to 21.4 %.

INNOVATIVE ALL-WEATHER TECHNOLOGY

Optimal yields, whatever the weather with excellent low-light and temperature behavior.

ENDURING HIGH PERFORMANCE

Long-term yield security with Anti LID and Anti PID Technology[1], Hot-Spot Protect and Traceable Quality Tra.Q™.

FRAME FOR VERSATILE MOUNTING OPTIONS

High-tech aluminum alloy frame protects from damage, enables use of a wide range of mounting structures and is certified regarding IEC for high snow (5400 Pa) and wind loads (2400 Pa).

A RELIABLE INVESTMENT

Double glass module design enables extended lifetime with 12-year product warranty and improved 30-year performance warranty[2].

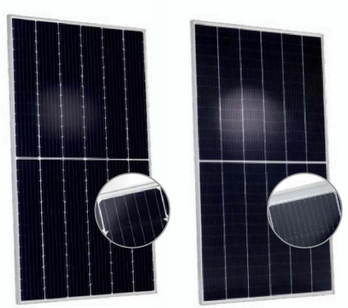

6 BUSBAR CELL TECHNOLOGY — 12 BUSBAR CELL TECHNOLOGY

[1] APT test conditions according to IEC / TS 62804-1:2015 method B (−1500 V, 168 h) including post treatment according to IEC 61215-1-1 Ed. 2.0 (CD)
[2] See data sheet on rear for further information.

THE IDEAL SOLUTION FOR:

Ground-mounted solar power plants

Engineered in Germany

Q CELLS

MECHANICAL SPECIFICATION

Format	87.2 in × 41.1 in × 1.38 in (including frame) (2216 mm × 1045 mm × 35 mm)
Weight	64.2 lbs (29.1 kg)
Front Cover	0.08 in (2.0 mm) thermally pre-stressed glass with anti-reflection technology
Back Cover	0.08 in (2.0 mm) semi-tempered glass
Frame	Anodized aluminum
Cell	6 × 26 monocrystalline Q.ANTUM solar half cells
Junction Box	2.09–3.98 in × 1.26–2.36 in × 0.59–0.71 in (53–101 mm × 32–60 mm × 15–18 mm), IP67, with bypass diodes
Cable	4 mm² Solar cable; (+) ≥ 27.6 in (700 mm), (−) ≥ 13.8 in (350 mm)
Connector	Stäubli MC4, Stäubli MC4-Evo2, Hanwha Q CELLS HQC4, IP68

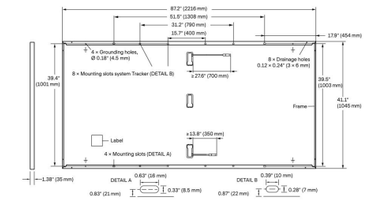

ELECTRICAL CHARACTERISTICS

POWER CLASS				475		480		485		490	
MINIMUM PERFORMANCE AT STANDARD TEST CONDITIONS, STC[1] AND BSTC[1] (POWER TOLERANCE +5 W / −0 W)					BSTC*		BSTC*		BSTC*		BSTC*
Minimum	Power at MPP[1]	P_{MPP}	[W]	475	519.6	480	525.0	485	530.5	490	536.0
	Short Circuit Current[1]	I_{SC}	[A]	11.08	12.12	11.12	12.17	11.16	12.21	11.20	12.26
	Open Circuit Voltage[1]	V_{OC}	[V]	53.15	53.34	53.39	53.58	53.63	53.82	53.86	54.06
	Current at MPP	I_{MPP}	[A]	10.55	11.54	10.59	11.58	10.63	11.63	10.67	11.67
	Voltage at MPP	V_{MPP}	[V]	45.03	45.02	45.33	45.32	45.63	45.62	45.93	45.92
	Efficiency[1]	η	[%]	≥20.5	≥22.4	≥20.7	≥22.7	≥20.9	≥22.9	≥21.2	≥23.1

Bifaciality of P_{MPP} and I_{SC}: 70 % ± 5 % • Bifaciality given for rear side irradiation on top of STC (front side) • According to IEC 60904-1-2

[1] Measurement tolerances P_{MPP} ± 3 %; I_{SC}, V_{OC} ± 5 % at STC: 1000 W/m²; *at BSTC: 1000 W/m² + φ × 135 W/m², φ = 70 % ± 5 %, 25 ± 2 °C, AM 1.5 according to IEC 60904-3

MINIMUM PERFORMANCE AT NORMAL OPERATING CONDITIONS, NMOT[2]							
Minimum	Power at MPP	P_{MPP}	[W]	357.6	361.4	365.1	368.9
	Short Circuit Current	I_{SC}	[A]	8.92	8.96	8.99	9.02
	Open Circuit Voltage	V_{OC}	[V]	50.27	50.49	50.72	50.95
	Current at MPP	I_{MPP}	[A]	8.30	8.34	8.37	8.40
	Voltage at MPP	V_{MPP}	[V]	43.06	43.35	43.63	43.92

[2] 800 W/m², NMOT, spectrum AM 1.5

Q CELLS PERFORMANCE WARRANTY

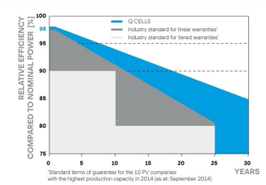

*Standard terms of guarantee for the 10 PV companies with the highest production capacity in 2014 (as at September 2014)

At least 98 % of nominal power during first year. Thereafter max. 0.45 % degradation per year. At least 93.95 % of nominal power up to 10 years. At least 84.95 % of nominal power up to 30 years.

All data within measurement tolerances. Full warranties in accordance with the warranty terms of the Q CELLS sales organisation of your respective country.

PERFORMANCE AT LOW IRRADIANCE

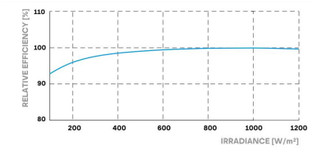

Typical module performance under low irradiance conditions in comparison to STC conditions (25 °C, 1000 W/m²)

TEMPERATURE COEFFICIENTS							
Temperature Coefficient of I_{SC}	α	[%/K]	+0.04	Temperature Coefficient of V_{OC}	β	[%/K]	−0.27
Temperature Coefficient of P_{MPP}	γ	[%/K]	−0.34	Nominal Module Operating Temperature	NMOT	[°F]	108 ± 5.4 (42 ± 3 °C)

PROPERTIES FOR SYSTEM DESIGN

Maximum System Voltage V_{SYS}	[V]	1500	PV module classification	Class II
Maximum Series Fuse Rating	[A DC]	20	Fire Rating based on ANSI / UL 61730	TYPE 29[4]
Max. Design Load, Push / Pull[3]	[lbs/ft²]	75 (3600 Pa) / 33 (1600 Pa)	Permitted Module Temperature on Continuous Duty	−40 °F up to +185 °F (−40 °C up to +85 °C)
Max. Test Load, Push / Pull[3]	[lbs/ft²]	113 (5400 Pa) / 50 (2400 Pa)		

[3] See Installation Manual — [4] New Type is similar to Type 3 but with metallic frame

QUALIFICATIONS AND CERTIFICATES

Quality Controlled PV - TÜV Rheinland; UL 61730, CE-compliant, IEC 61215:2016, IEC 61730:2016, U.S. Patent No. 9,893,215 (solar cells)

PACKAGING INFORMATION

Horizontal packaging	89.4 in 2270 mm	43.1 in 1095 mm	47.6 in 1210 mm	1975 lbs 896 kg	20 pallets	20 pallets	29 modules
Vertical packaging	90.8 in 2306 mm	45.3 in 1150 mm	47.4 in 1205 mm	2013 lbs 913 kg	20 pallets	20 pallets	30 modules

Note: Installation instructions must be followed. See the installation and operating manual or contact our technical service department for further information on approved installation and use of this product.

Hanwha Q CELLS America Inc.
400 Spectrum Center Drive, Suite 1400, Irvine, CA 92618, USA | **TEL** +1 949 748 59 96 | **EMAIL** inquiry@us.q-cells.com | **WEB** www.q-cells.us

Specifications subject to technical changes © Q CELLS Q.PEAK DUO XL-G10.3 / BFG_475-490_2021-12_Rev04_NA

RIVERTOWN SOLAR

CONTRACTOR

RIVERTOWN SOLAR LLC

PHONE: 914-325-2167
ADDRESS: 64 MAIN STREET IRVINGTON, NY10533

LIC. NO.: 52649
HIC. NO.:
ELE. NO.:

UNAUTHORIZED USE OF THIS DRAWING SET WITHOUT WRITTEN PERMISSION FROM CONTRACTOR IS IN VIOLATION OF U.S. COPYRIGHT LAWS AND WILL BE SUBJECT TO CIVIL DAMAGES AND PROSECUTIONS.

NEW PV SYSTEM: 9.975 kWp

KATZ RESIDENCE

13 N COTTENET
IRVINGTON, NY 10522
APN: 2.40-13-16

ENGINEER OF RECORD

PAPER SIZE: 11" x 17" (ANSI B)

RESOURCE DOCUMENT

DATE: 09.16.2022
DESIGN BY: V.P.
CHECKED BY: M.M.

REVISIONS

R-001.00
(SHEET 10)

ENPHASE

DATA SHEET

IQ8 Series Microinverters

Our newest IQ8 Microinverters are the industry's first microgrid-forming, software-defined microinverters with split-phase power conversion capability to convert DC power to AC power efficiently. The brain of the semiconductor-based microinverter is our proprietary application-specific integrated circuit (ASIC) which enables the microinverter to operate in grid-tied or off-grid modes. This chip is built in advanced 55nm technology with high speed digital logic and has super-fast response times to changing loads and grid events, alleviating constraints on battery sizing for home energy systems.

Part of the Enphase Energy System, IQ8 Series Microinverters integrate with the Enphase IQ Battery, Enphase IQ Gateway, and the Enphase App monitoring and analysis software.

Enphase 25 year limited warranty

IQ8 Series Microinverters redefine reliability standards with more than one million cumulative hours of power-on testing, enabling an industry-leading limited warranty of up to 25 years.

Connect PV modules quickly and easily to IQ8 Series Microinverters using the included Q-DCC-2 adapter cable with plug-n-play MC4 connectors.

UL CERTIFIED SAFETY

IQ8 Series Microinverters are UL Listed as PV Rapid Shut Down Equipment and conform with various regulations, when installed according to manufacturer's instructions.

© 2021 Enphase Energy. All rights reserved. Enphase, the Enphase logo, IQ8 microinverters, and other names are trademarks of Enphase Energy, Inc. Data subject to change.

IQ8SE-DS-0001-01-EN-US-2021-10-19

Easy to install

- Lightweight and compact with plug-n-play connectors
- Power Line Communication (PLC) between components
- Faster installation with simple two-wire cabling

High productivity and reliability

- Produce power even when the grid is down
- More than one million cumulative hours of testing
- Class II double-insulated enclosure
- Optimized for the latest high-powered PV modules

Microgrid-forming

- Complies with the latest advanced grid support
- Remote automatic updates for the latest grid requirements
- Configurable to support a wide range of grid profiles
- Meets CA Rule 21 (UL 1741-SA) requirements

IQ8 Series Microinverters

INPUT DATA (DC)		IQ8-60-2-US	IQ8PLUS-72-2-US	IQ8M-72-2-US	IQ8A-72-2-US	IQ8H-240-72-2-US	IQ8H-208-72-2-US[1]
Commonly used module pairings[2]	W	235 – 350	235 – 440	260 – 460	295 – 500	320 – 540+	295 – 500+
Module compatibility		60-cell/120 half-cell	60-cell/120 half-cell and 72-cell/144 half-cell				
MPPT voltage range	V	27 – 37	29 – 45	33 – 45	36 – 45	38 – 45	38 – 45
Operating range	V	25 – 48	25 – 58				
Min/max start voltage	V	30 / 48	30 / 58				
Max input DC voltage	V	50	60				
Max DC current[3] [module Isc]	A	15					
Overvoltage class DC port		II					
DC port backfeed current	mA	0					
PV array configuration		1x1 Ungrounded array; No additional DC side protection required; AC side protection requires max 20A per branch circuit					
OUTPUT DATA (AC)		**IQ8-60-2-US**	**IQ8PLUS-72-2-US**	**IQ8M-72-2-US**	**IQ8A-72-2-US**	**IQ8H-240-72-2-US**	**IQ8H-208-72-2-US**
Peak output power	VA	245	300	330	366	384	366
Max continuous output power	VA	240	290	325	349	380	360
Nominal (L-L) voltage/range[4]	V	240 / 211 – 264					208 / 183 – 250
Max continuous output current	A	1.0	1.21	1.35	1.45	1.58	1.73
Nominal frequency	Hz	60					
Extended frequency range	Hz	50 – 68					
Max units per 20 A (L-L) branch circuit[5]		16	13	11	11	10	9
Total harmonic distortion		<5%					
Overvoltage class AC port		III					
AC port backfeed current	mA	30					
Power factor setting		1.0					
Grid-tied power factor (adjustable)		0.85 leading – 0.85 lagging					
Peak efficiency	%	97.5	97.6	97.6	97.6	97.6	97.4
CEC weighted efficiency	%	97	97	97	97.5	97	97
Night-time power consumption	mW	60					
MECHANICAL DATA							
Ambient temperature range		-40°C to +60°C (-40°F to +140°F)					
Relative humidity range		4% to 100% (condensing)					
DC Connector type		MC4					
Dimensions (HxWxD)		212 mm (8.3") x 175 mm (6.9") x 30.2 mm (1.2")					
Weight		1.08 kg (2.38 lbs)					
Cooling		Natural convection – no fans					
Approved for wet locations		Yes					
Acoustic noise at 1 m		<60 dBA					
Pollution degree		PD3					
Enclosure		Class II double-insulated, corrosion resistant polymeric enclosure					
Environ. category / UV exposure rating		NEMA Type 6 / outdoor					
COMPLIANCE							
Certifications		CA Rule 21 (UL 1741-SA), UL 62109-1, UL1741/IEEE1547, FCC Part 15 Class B, ICES-0003 Class B, CAN/CSA-C22.2 NO. 107.1-01 This product is UL Listed as PV Rapid Shut Down Equipment and conforms with NEC 2014, NEC 2017, and NEC 2020 section 690.12 and C22.1-2018 Rule 64-218 Rapid Shutdown of PV Systems, for AC and DC conductors, when installed according to manufacturer's instructions.					

(1) The IQ8H-208 variant will be operating in grid-tied mode only at 208V AC. (2) No enforced DC/AC ratio. See the compatibility calculator at https://link.enphase.com/module-compatibility (3) Maximum continuous input DC current is 10.6A (4) Nominal voltage range can be extended beyond nominal if required by the utility. (5) Limits may vary. Refer to local requirements to define the number of microinverters per branch in your area.

IQ8SE-DS-0001-01-EN-US-2021-10-19

RIVERTOWN SOLAR

CONTRACTOR

RIVERTOWN SOLAR LLC

PHONE: 914-325-2167
ADDRESS: 64 MAIN STREET
IRVINGTON, NY10533

LIC. NO.: 52649
HIC. NO.:
ELE. NO.:

UNAUTHORIZED USE OF THIS DRAWING SET WITHOUT WRITTEN PERMISSION FROM CONTRACTOR IS IN VIOLATION OF U.S. COPYRIGHT LAWS AND WILL BE SUBJECT TO CIVIL DAMAGES AND PROSECUTIONS.

NEW PV SYSTEM: 9.975 kWp

KATZ RESIDENCE

13 N COTTENET
IRVINGTON, NY 10522
APN: 2.40-13-16

ENGINEER OF RECORD

PAPER SIZE: 11" x 17" (ANSI B)

RESOURCE DOCUMENT

DATE: 09.16.2022
DESIGN BY: V.P.
CHECKED BY: M.M.

REVISIONS

R-002.00
(SHEET 11)

Data Sheet
Enphase Networking

Enphase IQ Combiner 4/4C

X-IQ-AM1-240-4
X-IQ-AM1-240-4C

X-IQ-AM1-240-4C

X-IQ-AM1-240-4

The **Enphase IQ Combiner 4/4C** with Enphase IQ Gateway and integrated LTE-M1 cell modem (included only with IQ Combiner 4C) consolidates interconnection equipment into a single enclosure and streamlines IQ microinverters and storage installations by providing a consistent, pre-wired solution for residential applications. It offers up to four 2-pole input circuits and Eaton BR series busbar assembly.

Smart

- Includes IQ Gateway for communication and control
- Includes Enphase Mobile Connect cellular modem (CELLMODEM-M1-06-SP-05), included only with IQ Combiner 4C
- Includes solar shield to match Enphase IQ Battery aesthetics and deflect heat
- Flexible networking supports Wi-Fi, Ethernet, or cellular
- Optional AC receptacle available for PLC bridge
- Provides production metering and consumption monitoring

Simple

- Centered mounting brackets support single stud mounting
- Supports bottom, back and side conduit entry
- Up to four 2-pole branch circuits for 240 VAC plug-in breakers (not included)
- 80A total PV or storage branch circuits

Reliable

- Durable NRTL-certified NEMA type 3R enclosure
- Five-year limited warranty
- Two years labor reimbursement program coverage included for both the IQ Combiner SKU's
- UL listed

LISTED

To learn more about Enphase offerings, visit **enphase.com**

ENPHASE.

Enphase IQ Combiner 4/4C

MODEL NUMBER	
IQ Combiner 4 (X-IQ-AM1-240-4)	IQ Combiner 4 with Enphase IQ Gateway printed circuit board for integrated revenue grade PV production metering (ANSI C12.20 +/- 0.5%) and consumption monitoring (+/- 2.5%). Includes a silver solar shield to match the IQ Battery system and IQ System Controller 2 and to deflect heat.
IQ Combiner 4C (X-IQ-AM1-240-4C)	IQ Combiner 4C with Enphase IQ Gateway printed circuit board for integrated revenue grade PV production metering (ANSI C12.20 +/- 0.5%) and consumption monitoring (+/- 2.5%). Includes Enphase Mobile Connect cellular modem (CELLMODEM-M1-06-SP-05), a plug-and-play industrial-grade cell modem for systems up to 60 microinverters. (Available in the US, Canada, Mexico, Puerto Rico, and the US Virgin Islands, where there is adequate cellular service in the installation area.) Includes a silver solar shield to match the IQ Battery and IQ System Controller and to deflect heat.
ACCESSORIES AND REPLACEMENT PARTS	(not included, order separately)
Ensemble Communications Kit COMMS-CELLMODEM-M1-06 CELLMODEM-M1-06-SP-05 CELLMODEM-M1-06-AT-05	- Includes COMMS-KIT-01 and CELLMODEM-M1-06-SP-05 with 5-year Sprint data plan for Ensemble sites - 4G based LTE-M1 cellular modem with 5-year Sprint data plan - 4G based LTE-M1 cellular modem with 5-year AT&T data plan
Circuit Breakers BRK-10A-2-240V BRK-15A-2-240V BRK-20A-2P-240V BRK-15A-2P-240V-B BRK-20A-2P-240V-B	Supports Eaton BR210, BR215, BR220, BR230, BR240, BR250, and BR260 circuit breakers. Circuit breaker, 2 pole, 10A, Eaton BR210 Circuit breaker, 2 pole, 15A, Eaton BR215 Circuit breaker, 2 pole, 20A, Eaton BR220 Circuit breaker, 2 pole, 15A, Eaton BR215B with hold down kit support Circuit breaker, 2 pole, 20A, Eaton BR220B with hold down kit support
EPLC-01	Power line carrier (communication bridge pair), quantity - one pair
XA-SOLARSHIELD-ES	Replacement solar shield for IQ Combiner 4/4C
XA-PLUG-120-3	Accessory receptacle for Power Line Carrier in IQ Combiner 4/4C (required for EPLC-01)
XA-ENV-PCBA-3	Replacement IQ Gateway printed circuit board (PCB) for Combiner 4/4C
X-IQ-NA-HD-125A	Hold down kit for Eaton circuit breaker with screws.
ELECTRICAL SPECIFICATIONS	
Rating	Continuous duty
System voltage	120/240 VAC, 60 Hz
Eaton BR series busbar rating	125 A
Max. continuous current rating	65 A
Max. continuous current rating (input from PV/storage)	64 A
Max. fuse/circuit rating (output)	90 A
Branch circuits (solar and/or storage)	Up to four 2-pole Eaton BR series Distributed Generation (DG) breakers only (not included)
Max. total branch circuit breaker rating (input)	80A of distributed generation / 95A with IQ Gateway breaker included
Envoy breaker	10A or 15A rating GE/Siemens/Eaton included
Production metering CT	200 A solid core pre-installed and wired to IQ Gateway
Consumption monitoring CT (CT-200-SPLIT)	A pair of 200 A split core current transformers
MECHANICAL DATA	
Dimensions (WxHxD)	37.5 x 49.5 x 16.8 cm (14.75" x 19.5" x 6.63"). Height is 21.06" (53.5 cm) with mounting brackets.
Weight	7.5 kg (16.5 lbs)
Ambient temperature range	-40° C to +46° C (-40° to 115° F)
Cooling	Natural convection, plus heat shield
Enclosure environmental rating	Outdoor, NRTL-certified, NEMA type 3R, polycarbonate construction
Wire sizes	• 20 A to 50 A breaker inputs: 14 to 4 AWG copper conductors • 60 A breaker branch input: 4 to 1/0 AWG copper conductors • Main lug combined output: 10 to 2/0 AWG copper conductors • Neutral and ground: 14 to 1/0 copper conductors Always follow local code requirements for conductor sizing.
Altitude	To 2000 meters (6,560 feet)
INTERNET CONNECTION OPTIONS	
Integrated Wi-Fi	802.11b/g/n
Cellular	CELLMODEM-M1-06-SP-05, CELLMODEM-M1-06-AT-05 (4G based LTE-M1 cellular modem). Note that an Enphase Mobile Connect cellular modem is required for all Ensemble installations.
Ethernet	Optional, 802.3, Cat5E (or Cat 6) UTP Ethernet cable (not included)
COMPLIANCE	
Compliance, IQ Combiner	UL 1741, CAN/CSA C22.2 No. 107.1, 47 CFR, Part 15, Class B, ICES 003 Production metering: ANSI C12.20 accuracy class 0.5 (PV production) Consumption metering: accuracy class 2.5
Compliance, IQ Gateway	UL 60601-1/CANCSA 22.2 No. 61010-1

To learn more about Enphase offerings, visit **enphase.com**

ENPHASE.

© 2022 Enphase Energy. All rights reserved. Enphase, the Enphase logo, IQ Combiner 4/4C, and other names are trademarks of Enphase Energy, Inc. Data subject to change. 02-14-2022

RIVERTOWN SOLAR

CONTRACTOR

RIVERTOWN SOLAR LLC

PHONE: 914-325-2167
ADDRESS: 64 MAIN STREET
IRVINGTON, NY10533

LIC. NO.: 52649
HIC. NO.:
ELE. NO.:

UNAUTHORIZED USE OF THIS DRAWING SET WITHOUT WRITTEN PERMISSION FROM CONTRACTOR IS IN VIOLATION OF U.S. COPYRIGHT LAWS AND WILL BE SUBJECT TO CIVIL DAMAGES AND PROSECUTIONS.

NEW PV SYSTEM: 9.975 kWp

KATZ RESIDENCE

13 N COTTENET
IRVINGTON, NY 10522
APN: 2.40-13-16

ENGINEER OF RECORD

PAPER SIZE: 11" x 17" (ANSI B)

RESOURCE DOCUMENT

DATE: 09.16.2022
DESIGN BY: V.P.
CHECKED BY: M.M.

REVISIONS

R-003.00
(SHEET 12)

UL Product iQ™

QIJW.E341165 - Photovoltaic Rapid Shutdown System Equipment

Photovoltaic Rapid Shutdown System Equipment

ENPHASE ENERGY INC E341165
1420 N McDowell Blvd
Petaluma, CA 94954-6515 United States

Model(s): C250IQ7-2LN, IIQ7PD-72-2-US, IQ6IQ7-US, IQ6PLUSIQ7-US, IQ7PD-84-2-US, M175IQ7-208, M175IQ7-240, M190-60, -72, M190IQ7-208, M190IQ7-240, M200IQ7-208, M200IQ7-240, M210-84, M210IQ7-208, M210IQ7-240, M215-60, M215IQ7-208, M215IQ7-240, M250-60, -72, M250IQ7-208, M250IQ7-240, S230IQ7-208, S230IQ7-240, S280IQ7-208, S280IQ7-240

Model(s): IQ6-60-ACM-US*(b) (b) - Where * may be any combination of letters or numbers or hyphen or none

Model(s): IQ6-60-X-US*(a)(b) (a) - Where x may be 2, 5, or B. (b) - Where * may be any combination of letters or numbers or hyphen or none

Model(s): IQ6PLUS-72-ACM*(b) (b) - Where * may be any combination of letters or numbers or hyphen or none

Model(s): IQ6PLUS-72-X-US*(a)(b) (a) - Where x may be 2, 5, or B. (b) - Where * may be any combination of letters or numbers or hyphen or none

Model(s): IQ7-60 (c) (c) - May be f/b -2, 5, -E, or -ACM, f/b US, may be f/b -NM, may be f/b -RMA&, where "&" may be optional alphanumeric characters.

Model(s): IQ7A, may be f/b S, may be f/b 66 or -72 (c) (c) - May be f/b -2, 5, -E, or -ACM, f/b US, may be f/b -NM, may be f/b -RMA&, where "&" may be optional alphanumeric characters.

Model(s): IQ7A-72 (c) (c) - May be f/b -2, 5, -E, or -ACM, f/b US, may be f/b -NM, may be f/b -RMA&, where "&" may be optional alphanumeric characters.

Model(s): IQ7PLUS-72 (c) (c) - May be f/b -2, 5, -E, or -ACM, f/b US, may be f/b -NM, may be f/b -RMA&, where "&" may be optional alphanumeric characters.

Model(s): IQ7X-96 (c) (c) - May be f/b -2, 5, -E, or -ACM, f/b US, may be f/b -NM, may be f/b -RMA&, where "&" may be optional alphanumeric characters.

Model(s): IQ7XS-96 (c) (c) - May be f/b -2, 5, -E, or -ACM, f/b US, may be f/b -NM, may be f/b -RMA&, where "&" may be optional alphanumeric characters.

IQ8PV, Model(s): IQ7GPLUS-72 may be f/b -2, -5, -E or -M, may be f/b -ACM, f/b -US, may be f/b -NM, may be f/b -RMA, may be f/b -&, where "&" designates additional characters.

IQ8PV, Model(s): IQ8-60 may be f/b -2, -5, -E or -M, may be f/b -ACM, f/b -US, may be f/b -NM, may be f/b -RMA, may be f/b -&, where "&" designates additional characters.

IQ8PV, Model(s): IQ8A-72 may be f/b -2, -5, -E or -M, may be f/b -ACM, f/b -US, may be f/b -NM, may be f/b -RMA, may be f/b -&, where "&" designates additional characters.

IQ8PV, Model(s): IQ8H-208-72 may be f/b -2, -5, -E or -M, may be f/b -ACM, f/b -US, may be f/b -NM, may be f/b -RMA, may be f/b -&, where "&" designates additional characters.

IQ8PV, Model(s): IQ8H-240-72 may be f/b -2, -5, -E or -M, may be f/b -ACM, f/b -US, may be f/b -NM, may be f/b -RMA, may be f/b -&, where "&" designates additional characters.

IQ8PV, Model(s): IQ8M-72 may be f/b -2, -5, -E or -M, may be f/b -ACM, f/b -US, may be f/b -NM, may be f/b -RMA, may be f/b -&, where "&" designates additional characters.

IQ8PV, Model(s): IQ8PLUS-72 may be f/b -2, -5, -E or -M, may be f/b -ACM, f/b -US, may be f/b -NM, may be f/b -RMA, may be f/b -&, where "&" designates additional characters.

Last Updated on 2021-11-10

The appearance of a company's name or product in this database does not in itself assure that products so identified have been manufactured under UL's Follow-Up Service. Only those products bearing the UL Mark should be considered to be Certified and covered under UL's Follow-Up Service. Always look for the Mark on the product.

UL permits the reproduction of the material contained in the Online Certification Directory subject to the following conditions: 1. The Guide Information, Assemblies, Constructions, Designs, Systems, and/or Certifications (files) must be presented in their entirety and in a non-misleading manner, without any manipulation of the data (or drawings). 2. The statement "Reprinted from the Online Certifications Directory with permission from UL" must appear adjacent to the extracted material. In addition, the reprinted material must include a copyright notice in the following format: "© 2022 UL LLC"

RIVERTOWN SOLAR

CONTRACTOR

RIVERTOWN SOLAR LLC

PHONE: 914-325-2167
ADDRESS: 64 MAIN STREET
IRVINGTON, NY10533

LIC. NO.: 52649
HIC. NO.:
ELE. NO.:

UNAUTHORIZED USE OF THIS DRAWING SET WITHOUT WRITTEN PERMISSION FROM CONTRACTOR IS IN VIOLATION OF U.S. COPYRIGHT LAWS AND WILL BE SUBJECT TO CIVIL DAMAGES AND PROSECUTIONS.

NEW PV SYSTEM: 9.975 kWp

KATZ RESIDENCE

13 N COTTENET
IRVINGTON, NY 10522
APN: 2.40-13-16

ENGINEER OF RECORD

PAPER SIZE: 11" x 17" (ANSI B)

RESOURCE DOCUMENT

DATE: 09.16.2022
DESIGN BY: V.P.
CHECKED BY: M.M.

REVISIONS

R-004.00
(SHEET 13)

Tech Brief

IRONRIDGE

XR Rail Family

Solar Is Not Always Sunny

Over their lifetime, solar panels experience countless extreme weather events. Not just the worst storms in years, but the worst storms in 40 years. High winds capable of ripping panels from a roof, and snowfalls weighing enough to buckle a panel frame.

XR Rails are the structural backbone preventing these results. They resist uplift, protect against buckling and safely and efficiently transfer loads into the building structure. Their superior spanning capability requires fewer roof attachments, reducing the number of roof penetrations and the amount of installation time.

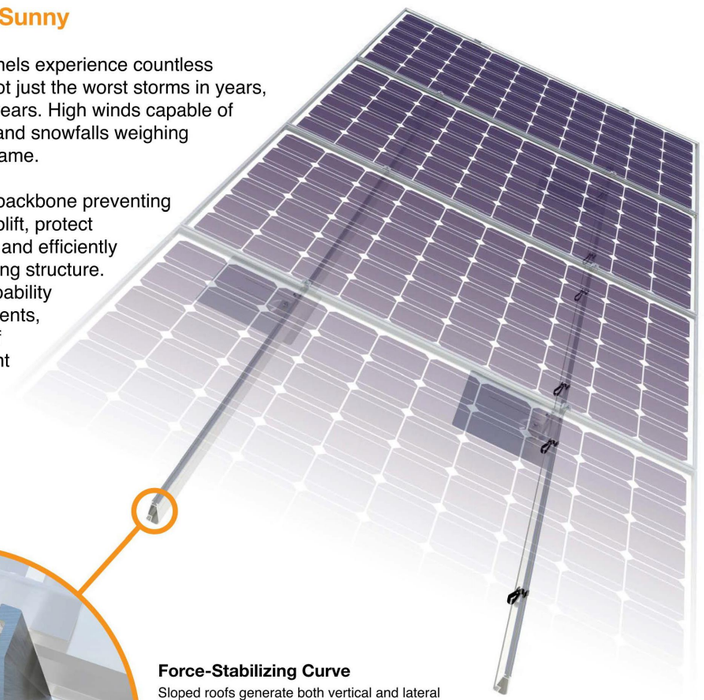

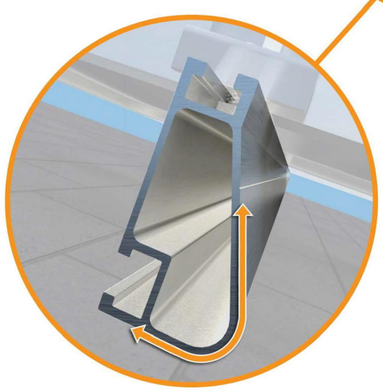

Force-Stabilizing Curve

Sloped roofs generate both vertical and lateral forces on mounting rails which can cause them to bend and twist. The curved shape of XR Rails is specially designed to increase strength in both directions while resisting the twisting. This unique feature ensures greater security during extreme weather and a longer system lifetime.

Compatible with Flat & Pitched Roofs

XR Rails are compatible with FlashFoot and other pitched roof attachments.

IronRidge offers a range of tilt leg options for flat roof mounting applications.

Corrosion-Resistant Materials

All XR Rails are made of marine-grade aluminum alloy, then protected with an anodized finish. Anodizing prevents surface and structural corrosion, while also providing a more attractive appearance.

© 2014 IronRidge, Inc. All rights reserved. Visit www.ironridge.com or call 1-800-227-9523 for more information. Version 1.11

Tech Brief

XR Rail Family

The XR Rail Family offers the strength of a curved rail in three targeted sizes. Each size supports specific design loads, while minimizing material costs. Depending on your location, there is an XR Rail to match.

XR10

XR10 is a sleek, low-profile mounting rail, designed for regions with light or no snow. It achieves 6 foot spans, while remaining light and economical.

- 6' spanning capability
- Moderate load capability
- Clear anodized finish
- Internal splices available

XR100

XR100 is the ultimate residential mounting rail. It supports a range of wind and snow conditions, while also maximizing spans up to 8 feet.

- 8' spanning capability
- Heavy load capability
- Clear & black anodized finish
- Internal splices available

XR1000

XR1000 is a heavyweight among solar mounting rails. It's built to handle extreme climates and spans 12 feet or more for commercial applications.

- 12' spanning capability
- Extreme load capability
- Clear anodized finish
- Internal splices available

Rail Selection

The following table was prepared in compliance with applicable engineering codes and standards. Values are based on the following criteria: ASCE 7-10, Roof Zone 1, Exposure B, Roof Slope of 7 to 27 degrees and Mean Building Height of 30 ft. Visit IronRidge.com for detailed span tables and certifications.

Load		Rail Span					
Snow (PSF)	Wind (MPH)	4'	5' 4"	6'	8'	10'	12'
None	100	XR10		XR100		XR1000	
	120						
	140						
	160						
10-20	100						
	120						
	140						
	160						
30	100						
	160						
40	100						
	160						
50-70	160						
80-90	160						

RIVERTOWN SOLAR

CONTRACTOR

RIVERTOWN SOLAR LLC

PHONE: 914-325-2167
ADDRESS: 64 MAIN STREET
IRVINGTON, NY10533

LIC. NO.: 52649
HIC. NO.:
ELE. NO.:

UNAUTHORIZED USE OF THIS DRAWING SET WITHOUT WRITTEN PERMISSION FROM CONTRACTOR IS IN VIOLATION OF U.S. COPYRIGHT LAWS AND WILL BE SUBJECT TO CIVIL DAMAGES AND PROSECUTIONS.

NEW PV SYSTEM: 9.975 kWp

KATZ RESIDENCE

13 N COTTENET
IRVINGTON, NY 10522
APN: 2.40-13-16

ENGINEER OF RECORD

PAPER SIZE: 11" x 17" (ANSI B)

RESOURCE DOCUMENT

DATE: 09.16.2022
DESIGN BY: V.P.
CHECKED BY: M.M.

REVISIONS

R-005.00
(SHEET 14)

RT-MINI

Self-flashing base for asphalt & metal roof-top PV mounting systems

RT-MINI is suitable for mounting any rail system with a conventional L-Foot.

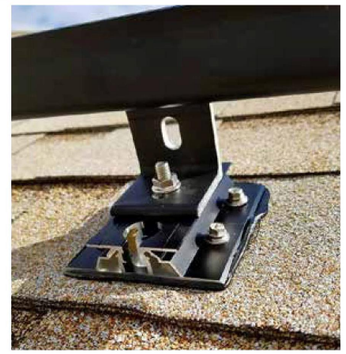

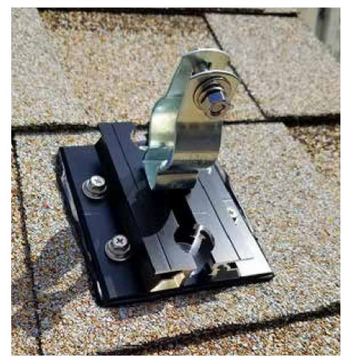

Dual bolt design: M8 or 5/16" for L-Foot & 1/4" for EMC

Installation Manual

ICC ES

ICC ESR 3575

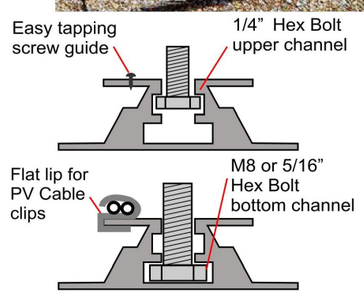

Roof Tech

The Standard for Waterproof Flexible Flashing Since 1994

www.roof-tech.us info@roof-tech.us

RT-MINI

Flexible Flashing certified by the International Code Council (ICC)

Engineered to ASTM D 1761 (Standard Test Methods for Mechanical Fasteners in Wood)

Components

RT2-00-MINIBK

MINI base : 20 ea.
Screw : 40 ea.
Extra RT-Butyl : 10 ea.

Optional item

5 x 60mm Mounting screw (RT2-04-SD5-60) : 100 ea./Bag

5/16" Hex bolt, washer & nut set (RT-04-BN30SL-US) : 100 ea./Bag

RT-Butyl (RT2-04-BUTYLT) : 10 ea./Box

RT-Butyl is Roof Tech's flexible flashing used in one million residential PV systems for the last 26 years. It is the first PV mounting system with Flexible Flashing certified by the ICC. Engineered to withstand wind speeds up to 180 mph and ground snow up to 90 psf.

Metal Flashing Retrofit **Flexible Flashing**

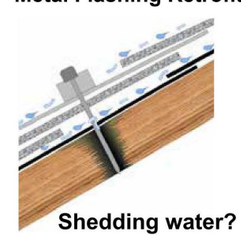

Shedding water? **100% Waterproof**

ICC ESR-3575 ASTM2140 testing UV testing (7500 hrs.)

Dimensions in (mm)

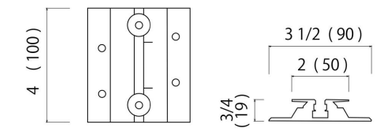

Rafter installation

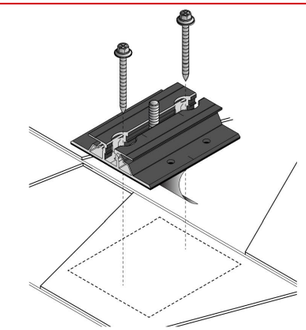

Deck installation

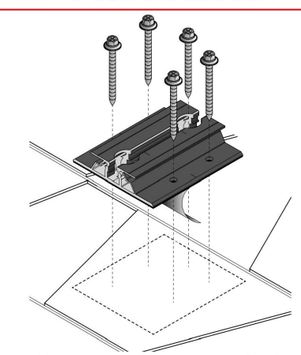

P.E. Stamped Letters available at www.roof-tech.us/support

TAS 100 A on metal and asphalt roof.

Roof Tech Inc.

www.roof-tech.us info@roof-tech.us

10620 Treena Street, Suite 230, San Diego, CA 92131

858.935.6064

March 2020

RIVERTOWN SOLAR

CONTRACTOR

RIVERTOWN SOLAR LLC

PHONE: 914-325-2167

ADDRESS: 64 MAIN STREET IRVINGTON, NY10533

LIC. NO.: 52649

HIC. NO.:

ELE. NO.:

UNAUTHORIZED USE OF THIS DRAWING SET WITHOUT WRITTEN PERMISSION FROM CONTRACTOR IS IN VIOLATION OF U.S. COPYRIGHT LAWS AND WILL BE SUBJECT TO CIVIL DAMAGES AND PROSECUTIONS.

NEW PV SYSTEM: 9.975 kWp

KATZ RESIDENCE

13 N COTTENET
IRVINGTON, NY 10522
APN: 2.40-13-16

ENGINEER OF RECORD

PAPER SIZE: 11" x 17" (ANSI B)

RESOURCE DOCUMENT

DATE: 09.16.2022

DESIGN BY: V.P.

CHECKED BY: M.M.

REVISIONS

R-006.00

(SHEET 15)

IRONRIDGE

XR100 Rail

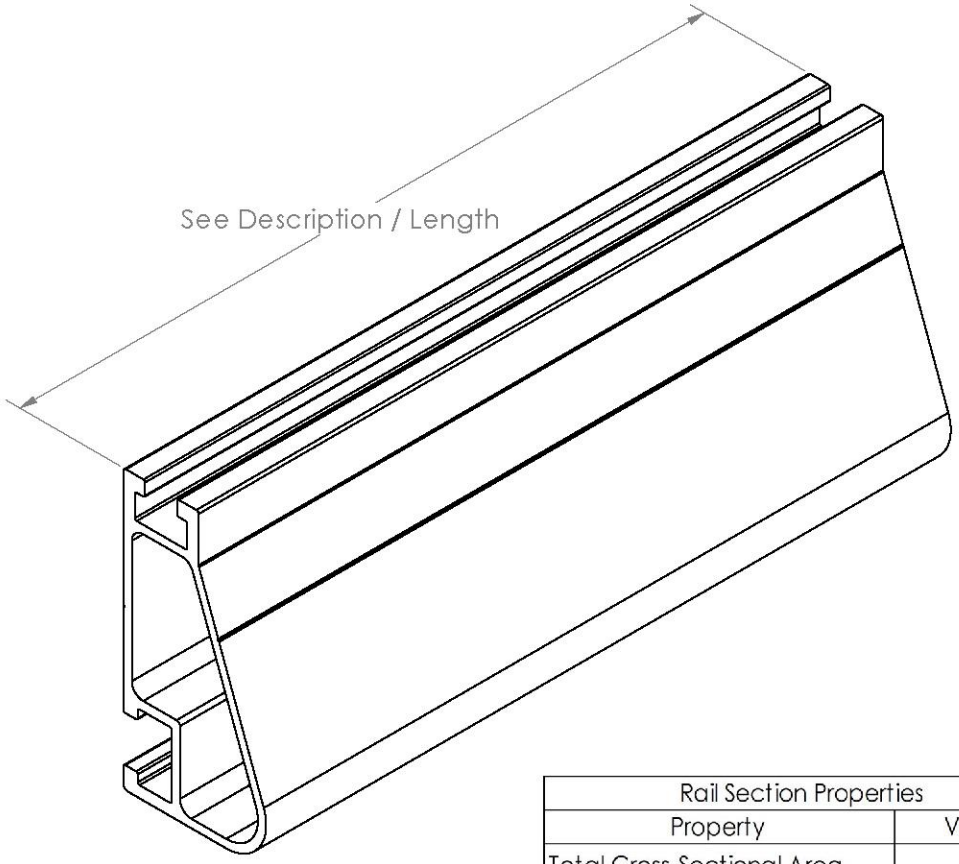

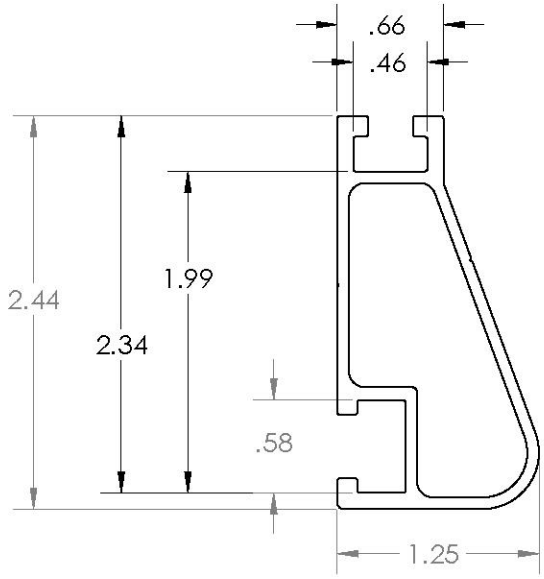

Rail Section Properties	
Property	Value
Total Cross-Sectional Area	0.582 in^2
Section Modulus (X-axis)	0.297 in^3
Moment of Inertia (X-axis)	0.390 in^4
Moment of Inertia (Y-axis)	0.085 in^4
Torsional Constant	0.214 in^3
Polar Moment of Inertia	0.126 in^4

APPROVED MATERIALS:
6005-T6, 6005A-T61, 6105-T5, 6N01-T6
(34,000 PSI YIELD STRENGTH MINIMUM)

Clear Part Number	Black Part Number	Description / Length	Material	Weight
XR-100-132A	XR-100-132B	XR100, Rail 132" (11 Feet)	6000-Series Aluminum	7.50 lbs.
XR-100-168A	XR-100-168B	XR100, Rail 168" (14 Feet)		9.55 lbs.
XR-100-204A	XR-100-204B	XR100, Rail 204" (17 Feet)		11.60 lbs.

v1.1

IRONRIDGE

L-Foot

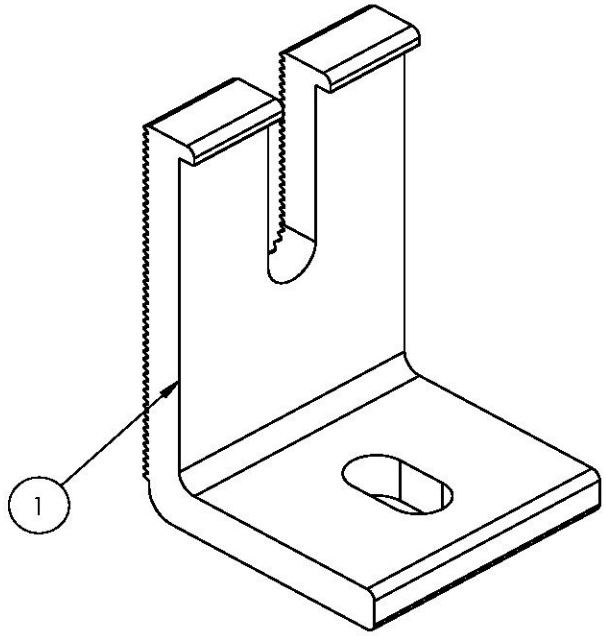

ITEM NO	DESCRIPTION	QTY IN KIT
1	FOOT, EXTRUDED L - SLOTTED	4

PART NUMBER	DESCRIPTION
FM-LFT-003	Kit, 4Pcs, Slotted L-Foot, Mill
FM-LFT-003-B	Kit, 4Pcs, Slotted L-Foot, Black

1) Foot, Extruded L - Slotted

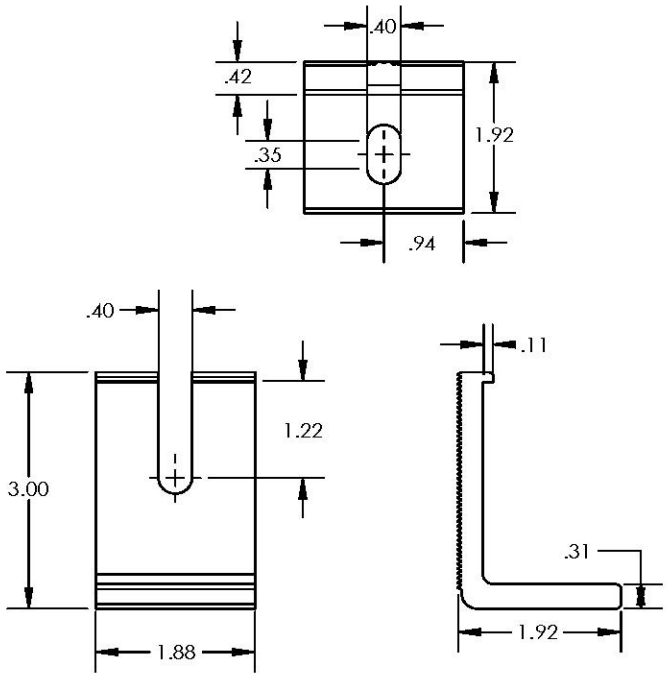

v1.11

George Latimer
Westchester County Executive

Westchestergov.com

James Maisano
Director, Consumer Protection

Department of Consumer Protection
Home Improvement License

RIVERTOWN SOLAR LLC

64 MAIN STREET

IRVINGTON,NY-10533

This license is issued in accordance with Article XVI of the Westchester County Consumer Protection Code and is valid only upon presence of the official department seal. Proof of citizenship or immigration status is not required for issuance of this license.
NOT FOR FEDERAL PURPOSES

Department of Consumer Protection
Westchester County NY

License Number

WC-34809-H22

Date of Expiration

01/10/2024

© GOES 3461

LITHO IN U.S.A.

VILLAGE OF IRVINGTON
BUILDING DEPARTMENT
85 MAIN STREET
IRVINGTON, NEW YORK 10533
TEL: (914) 591-8335 • FAX: (914) 591-5870

PHOTOVOLTAIC (PV SOLAR) RESIDENTIAL SYSTEMS PERMIT APPLICATION CHECK LIST

Revised June 7, 2017

It is suggested that all applicants applying for a permit read and understand the manufacture installation instructions prior to applying for a building permit and attached ARB guide lines and Village code for Solar Energy Equipment.

REQUIREMENTS TO APPLY FOR A PHOTOVOLTAIC (PV SOLAR) SYSTEM PERMIT

✓ 1) Apply on line at www.irvingtonny.gov for a mechanical permit, under building permits and along with your application, submit to the building department the following;
✓ 2) Owners phone number and email address entered in the online permit application
✓ 3) Evidence of Workers Compensation Insurance (on a C-105 or equivalent)
✓ 4) Evidence of Liability Insurance naming the Village of Irvington additional insured
✓ 5) A copy of the contractors Westchester County Department of Consumer Protection License
✓ 6) Pursuant to 9-12-A. provide evidence of notice to adjacent properties owners not less than 10 days prior to the meeting (see attached code section for more details)
✓ 7) Submit permit fee: (all fees must be paid at time of submission)

___ $85 application fee
___ $200 for systems up to 5 kilowatts
✓ $450 for systems above 5 kilowatts and less than 10 kilowatts
___ $700 for systems above 10 kilowatts and less than 20 kilowatts
___ $700 plus $250 per additional 10 kilowatts above 20 for systems above 20 kilowatts
___ $75 Certificate of Completion inspection and fee

✓ 8) An affidavit from a NYS licensed professional detailing and certifying that the existing structure meets or exceeds the minimum load requirement's as per TABLE R301.2(1) for wind and load before and after installation of the proposed equipment or the proposed upgrades to the existing structure to accomplish the aforesaid.
✓ 9) Drawings (signed and sealed by a NYS licensed professional) of the roof plan showing the following criteria;

a. ✓ Showing all proposed PV panels on all proposed roof surfaces.
b. ✓ Showing all equipment on all elevations including
c. ✓ Show / list all roof connectors and flashing details
d. ✓ Show compliance with section R902.4 (fire classification in accordance with UL1703 and 3' from any lot line)
e. ✓ Show compliance with sections R324.3.1 through R324.7.2.5 and NFPA 70 (installation)
f. ✓ Show compliance with section R324.7 (access and pathways) (see attachment)
g. ✓ Show compliance with section R324.7.2.1-6. (roof access points) (see attachment)
h. ✓ Show compliance with section R324.7.3 (ground access areas) (see attachment)
i. ✓ Show compliance with section R324.7.4 (single ridge roofs *when applicable*) (see attachment)
j. ✓ Show compliance with section R324.7.5 (hip roofs *when applicable*) (see attachment)
k. ✓ Show compliance with section R324.7.6 (roof with valleys *when applicable*) (see attachment)
l. ✓ Show compliance with section R324.7.7 (allowance for smoke ventilation operations) (see attachment)
m. ✓ Show a Fire Department AC disconnect, located outside by the Utility meter on all systems.

✓ 10) Provide a drawing or manufactures cut sheets of array mounting hardware and interconnection diagram and specifications.
✓ 11) Provide a drawing or manufactures cut sheets of the unit mount and roof penetration's flashing system.
✓ 12) 3 wire diagram showing all proposed equipment as governed by the National Electrical Code (NEC)
✓ 13) Provide a diagram showing all proposed labels and labeling locations including; Solar AC Disconnect, Inverter Output, Connection Warning, Duel Power Source Warning, Solar AC Combiner Panel, Solar PV Circuits Only, Solar Production meter. (see attachment)
✓ 14) Provide snow guards on panels were snow has the potential of sliding of the panel into a neighbor's property
✓ 15) Pictures of dwelling showing photo shopped arrays on the structure.
✓ 16) Provide a drawing or photo shop picture of all proposed equipment on all effected elevations (including FD emergency disconnect switch)
✓ 17) A Fire Department AC disconnect, located outside by the Utility meter on all systems.

VILLAGE OF IRVINGTON
BUILDING DEPARTMENT
85 MAIN STREET
IRVINGTON, NEW YORK 10533
TEL: (914) 591-8335 • FAX: (914) 591-5870

✓ 18) Separate Electrical Permit application by a Westchester County Department of Licensing, licensed Electrician with required insurances and the appropriate fee (must be filed by the licensed contractor, see village application for further details).
✓ 19) Submit signed check list with submission and appropriate building permit fee.
✓ 20) Applicant has provided seven copies of the entire submittal for Architectural Review Board approval.

Applicant Affidavit:
Applicants Name: Brandon Hall
Applicants Address: 64 Main Street 10533

Applicants Phone # 914-591-0100
Applicants Email brandon@conhudelectric.com

Applicant Name: Brandon Hall **Signature:** _____ **Date:** 10/03/2022 **By signing this affidavit I attest to have read the attached Solar Energy Equipment Code and the Solar Equipment Guidelines manufactures installation instructions and that all information asked for above has been submitted and that the submitted information is correct.**

General Contractor Affidavit:
Contractors Name: Rivertown Solar LLC
Contractors Address: 64 Main Street 10533

Contractors Phone # 914-591-0100
Contractors Email brandon@conhudelectric.com

General Contractor Name: Brandon Hall **Signature:** _____ **Date:** 10/03/2022 **By signing this affidavit I attest to being the general contractor of record for this application and will be responsible for oversite and direct supervision of same, and will maintain a valid Westchester County Department of Consumer Protection License, a valid for Workers Compensation Policy and a General Liability Policy listing the Village of Irvington as Certificate Holder and additional insured with no conditions until such time I apply for and receive a Certificate of Completion.**

Electrical Contractor Affidavit:
Electrical Contractors Name: Consolidated Hudson Electric
Electrical Contractors Address: 64 Main St. Irvington, NY 10533

Electrical Contractors Phone # 914-591-0100
Electrical Contractors Email info@conhudelectric.com

Electrical Contractor Name: Brandon Hall **Signature:** _____ **Date:** _____ **By signing this affidavit I attest to being the electrical contractor of record for this application and will be responsible for oversite and direct supervision of same, and will maintain a valid Westchester County Electrical License, a valid for Workers Compensation Policy and a General Liability Policy listing the Village of Irvington as Certificate Holder and additional insured with no conditions until such time I apply for and receive a Certificate of Completion.**

Note: Applications for all exterior elevation changes including photovoltaic solar systems are required to apply for, make a presentation in front of, and receive approval from the Village of Irvington Architectural Review Board (ARB) prior to issuance of a building permit. The ARB meetings are the second and fourth Mondays of the month, with a deadline for submissions one week prior to the meetings (see village web site for confirmation of meetings). Seven sets of copies of the entire application are required to be submitted at the deadline with appropriate fee at the time of submission.

Note: The following list above is given to assist in the application process. It is not intended to be a replacement for the Building or Zoning Code, County or State Regulations, or Consolidate Edison Requirements. Unique and Special projects may require additional information.

Hours of Construction: Monday-Friday 7AM-7PM; Saturday 9AM-5PM; Sunday and holiday's construction is prohibited
Only completed applications will be accepted with attached insurance certificates and County license

VILLAGE OF IRVINGTON
BUILDING DEPARTMENT
85 MAIN STREET
IRVINGTON, NEW YORK 10533
TEL: (914) 591-8335 • FAX: (914) 591-5870
Web Site: www.Irvingtonny.gov

LICENSED PROFESSIONAL AFFIDAVIT for RESIDENTIAL SOLAR SYSTEMS

TO BE SUBMITTED AS PART OF THE PERMIT APPLICATION

AFFIDAVIT OF ARCHITECT OR ENGINEER

State of New York } ss.:
County of Westchester }

I the undersigned, under penalty of perjury, do hereby affirm:

1. I am an the (architect)(engineer) duly licensed in the State of New York

2. I am the NYS licensed design professional named in the Application for which a Building Permit for a residential solar system located at _____, Irvington, New York 10533.

3. I have inspected the existing building and structure and find that the existing structure with the proposed solar panel installation and connections to the existing roof meet the minimum criteria set forth in;
   Applicable Codes: 2015 Residential Code of New York State
   Design Roof Load: 30 psf live load, 115 psf dead load, 45 psf total load
   Design Wind Load: 120 mph, 35psf
   OR have proposed additional measures to insure compliance with above.

4. I have reviewed the following submitted drawings and/or manufacture specifications as part of the submission
   List applicable plans with revision dates: _____(rev date)_____
   _____(rev date)_____
   _____(rev date)_____
   _____(rev date)_____
   _____(rev date)_____
   _____(rev date)_____

5. The plans, drawings and specifications which the Building Permit is requested and listed above, as submitted (a)-were prepared by me or under my supervision, and (b)-to the best of my knowledge comply with the requirements of the Residential Building Code of New York State as adopted by the Village of Irvington, applicable design loads and all other applicable laws, rules and regulations governing building construction.

_____
Signature

_____
(Architect) (Engineer)

Sworn to before me this
____day of_____, 20___.

_____
Notary Public

NOTICE OF APPLICATION AND HEARING

Board of Architectural Review
Clerk's Office
Village of Irvington
Westchester County, New York

CERTIFIED MAIL

Date of Mailing _____

NOTICE:
Pursuant to 9-12 of the code of the Village of Irvington notice to adjacent neighbors (as defined below) is required 10 days prior a meeting where an application for Solar Panels to the Village of Irvington Architectural Board is asking to be heard.

Date of Meeting: _____
Time of Meeting: Meeting starts at 8pm
Location of Meeting: Trustees Meeting Room
85 Main St. Irvington, NY 10533

Applicant Name	_____	Owners Name	_____
Applicant Mailing Address	_____	Owner Mailing Address	_____
	_____		_____
Applicant Phone Number	_____	Owners Phone Number	_____
Applicant Email Address	_____	Owners Email Address	_____

Address of Proposed Solar Panels:
Street Address _____
_____

To Adjacent Neighbors of: _____
_____

Please take notice that the applicant named above is requesting the Board of Architectural Review of the Village of Irvington to grant a permit for the installation of **Solar Energy Equipment** to the address listed above.
Plans of the proposed work are available in the office of the Irvington Building Department for public inspection during regular business hours 5 days prior to the scheduled meeting.

9-12. SolarEnergyEquipment.
For any application for a building permit for solar energy equipment, written notice of the application and the date, time and place of the meeting at which it will be considered must be given to all adjacent property owners not less than 10 days prior to the meeting date. Notice shall be by a method of mail or a delivery service company providing proof of mailing or delivery or by personal service of such notice on the property owners, evidenced by their signature as acknowledgment of receipt of such notice on a form supplied or similar to one supplied by the Village Clerk. Proof of service of the notice shall be filed prior to or at the meeting at which the application is considered.*
("Adjacent property" refers to any neighbor that shares a property line with the subject property as well as neighbors across any street from the subject property.)

NOTICE OF APPLICATION AND HEARING

Board of Architectural Review
Clerk's Office
Village of Irvington
Westchester County, New York

CERTIFIED MAIL

Date of Mailing 10/03/2022

NOTICE:
Pursuant to 9-12 of the code of the Village of Irvington notice to adjacent neighbors (as defined below) is required 10 days prior a meeting where an application for Solar Panels to the Village of Irvington Architectural Board is asking to be heard.

Date of Meeting: 11/02/2022
Time of Meeting: Meeting starts at 8pm
Location of Meeting: Trustees Meeting Room
85 Main St. Irvington, NY 10533

Applicant Name	BRANDON HALL	Owners Name	ALAYNE KATZ
Applicant Mailing Address	64 MAIN ST Irvington, NY 10533	Owner Mailing Address	13 N COTTENET ST IRVINGTON NY 10533
Applicant Phone Number	914-591-0100	Owners Phone Number	914-841-4007
Applicant Email Address	eric@rivertownsolar.com	Owners Email Address	ALAYNE10533@GMAIL.COM

Address of Proposed Solar Panels:
Street Address 13 N COTTENET ST
IRVINGTON NY 10533

To Adjacent Neighbors of: 180 EAST 94 LLC
35 MAIN ST IRVINGTON NY 10533

Please take notice that the applicant named above is requesting the Board of Architectural Review of the Village of Irvington to grant a permit for the installation of **Solar Energy Equipment** to the address listed above.
Plans of the proposed work are available in the office of the Irvington Building Department for public inspection during regular business hours 5 days prior to the scheduled meeting.

9-12. Solar Energy Equipment.
For any application for a building permit for solar energy equipment, written notice of the application and the date, time and place of the meeting at which it will be considered must be given to all adjacent property owners not less than 10 days prior to the meeting date. Notice shall be by a method of mail or a delivery service company providing proof of mailing or delivery or by personal service of such notice on the property owners, evidenced by their signature as acknowledgment of receipt of such notice on a form supplied or similar to one supplied by the Village Clerk. Proof of service of the notice shall be filed prior to or at the meeting at which the application is considered.*
("Adjacent property" refers to any neighbor that shares a property line with the subject property as well as neighbors across any street from the subject property.)

NOTICE OF APPLICATION AND HEARING

Board of Architectural Review
Clerk's Office
Village of Irvington
Westchester County, New York

CERTIFIED MAIL

Date of Mailing 10/03/2022

NOTICE:
Pursuant to 9-12 of the code of the Village of Irvington notice to adjacent neighbors (as defined below) is required 10 days prior a meeting where an application for Solar Panels to the Village of Irvington Architectural Board is asking to be heard.

Date of Meeting: 11/02/2022
Time of Meeting: Meeting starts at 8pm
Location of Meeting: Trustees Meeting Room
85 Main St. Irvington, NY 10533

Applicant Name	BRANDON HALL	Owners Name	ALAYNE KATZ
Applicant Mailing Address	64 MAIN ST Irvington, NY 10533	Owner Mailing Address	13 N COTTENET ST IRVINGTON NY 10533
Applicant Phone Number	914-591-0100	Owners Phone Number	914-841-4007
Applicant Email Address	eric@rivertownsolar.com	Owners Email Address	ALAYNE10533@GMAIL.COM

Address of Proposed Solar Panels:
Street Address 13 N COTTENET ST
IRVINGTON NY 10533

To Adjacent Neighbors of: VINGSAN LIMITED PARTNERSHIP
45 MAIN ST IRVINGTON NY 10533

Please take notice that the applicant named above is requesting the Board of Architectural Review of the Village of Irvington to grant a permit for the installation of **Solar Energy Equipment** to the address listed above.
Plans of the proposed work are available in the office of the Irvington Building Department for public inspection during regular business hours 5 days prior to the scheduled meeting.

9-12. Solar Energy Equipment.
For any application for a building permit for solar energy equipment, written notice of the application and the date, time and place of the meeting at which it will be considered must be given to all adjacent property owners not less than 10 days prior to the meeting date. Notice shall be by a method of mail or a delivery service company providing proof of mailing or delivery or by personal service of such notice on the property owners, evidenced by their signature as acknowledgment of receipt of such notice on a form supplied or similar to one supplied by the Village Clerk. Proof of service of the notice shall be filed prior to or at the meeting at which the application is considered.*
("Adjacent property" refers to any neighbor that shares a property line with the subject property as well as neighbors across any street from the subject property.)

NOTICE OF APPLICATION AND HEARING

Board of Architectural Review

Clerk's Office
Village of Irvington
Westchester County, New York

CERTIFIED MAIL

Date of Mailing 10/03/2022

NOTICE:
Pursuant to 9-12 of the code of the Village of Irvington notice to adjacent neighbors (as defined below) is required 10 days prior a meeting where an application for Solar Panels to the Village of Irvington Architectural Board is asking to be heard.

Date of Meeting: 11/02/2022
Time of Meeting: Meeting starts at 8pm
Location of Meeting: Trustees Meeting Room
85 Main St. Irvington, NY 10533

Applicant Name	BRANDON HALL	Owners Name	ALAYNE KATZ
Applicant Mailing Address	64 MAIN ST Irvington, NY 10533	Owner Mailing Address	13 N COTTENET ST IRVINGTON NY 10533
Applicant Phone Number	914-591-0100	Owners Phone Number	914-841-4007
Applicant Email Address	eric@rivertownsolar.com	Owners Email Address	ALAYNE10533@GMAIL.COM

Address of Proposed Solar Panels:
Street Address 13 N COTTENET ST
IRVINGTON NY 10533

To Adjacent Neighbors of: ESTATE RESTORATION INC
11 N DUTCHER ST IRVINGTON NY 10533

Please take notice that the applicant named above is requesting the Board of Architectural Review of the Village of Irvington to grant a permit for the installation of **Solar Energy Equipment** to the address listed above.
Plans of the proposed work are available in the office of the Irvington Building Department for public inspection during regular business hours 5 days prior to the scheduled meeting.

9-12. Solar Energy Equipment.
For any application for a building permit for solar energy equipment, written notice of the application and the date, time and place of the meeting at which it will be considered must be given to all adjacent property owners not less than 10 days prior to the meeting date. Notice shall be by a method of mail or a delivery service company providing proof of mailing or delivery or by personal service of such notice on the property owners, evidenced by their signature as acknowledgment of receipt of such notice on a form supplied or similar to one supplied by the Village Clerk. Proof of service of the notice shall be filed prior to or at the meeting at which the application is considered.*
("Adjacent property" refers to any neighbor that shares a property line with the subject property as well as neighbors across any street from the subject property.)

NOTICE OF APPLICATION AND HEARING

Board of Architectural Review

Clerk's Office
Village of Irvington
Westchester County, New York

CERTIFIED MAIL

Date of Mailing 10/03/2022

NOTICE:
Pursuant to 9-12 of the code of the Village of Irvington notice to adjacent neighbors (as defined below) is required 10 days prior a meeting where an application for Solar Panels to the Village of Irvington Architectural Board is asking to be heard.

Date of Meeting: 11/02/2022
Time of Meeting: Meeting starts at 8pm
Location of Meeting: Trustees Meeting Room
85 Main St. Irvington, NY 10533

Applicant Name	BRANDON HALL	Owners Name	ALAYNE KATZ
Applicant Mailing Address	64 MAIN ST Irvington, NY 10533	Owner Mailing Address	13 N COTTENET ST IRVINGTON NY 10533
Applicant Phone Number	914-591-0100	Owners Phone Number	914-841-4007
Applicant Email Address	eric@rivertownsolar.com	Owners Email Address	ALAYNE10533@GMAIL.COM

Address of Proposed Solar Panels:
Street Address 13 N COTTENET ST
IRVINGTON NY 10533

To Adjacent Neighbors of: SAMANTHA KEAT
12 N COTTENET ST IRVINGTON NY 10533

Please take notice that the applicant named above is requesting the Board of Architectural Review of the Village of Irvington to grant a permit for the installation of **Solar Energy Equipment** to the address listed above.
Plans of the proposed work are available in the office of the Irvington Building Department for public inspection during regular business hours 5 days prior to the scheduled meeting.

9-12. Solar Energy Equipment.
For any application for a building permit for solar energy equipment, written notice of the application and the date, time and place of the meeting at which it will be considered must be given to all adjacent property owners not less than 10 days prior to the meeting date. Notice shall be by a method of mail or a delivery service company providing proof of mailing or delivery or by personal service of such notice on the property owners, evidenced by their signature as acknowledgment of receipt of such notice on a form supplied or similar to one supplied by the Village Clerk. Proof of service of the notice shall be filed prior to or at the meeting at which the application is considered.*
("Adjacent property" refers to any neighbor that shares a property line with the subject property as well as neighbors across any street from the subject property.)

NOTICE OF APPLICATION AND HEARING

Board of Architectural Review
Clerk's Office
Village of Irvington
Westchester County, New York

CERTIFIED MAIL

Date of Mailing 10/03/2022

NOTICE:
Pursuant to 9-12 of the code of the Village of Irvington notice to adjacent neighbors (as defined below) is required 10 days prior a meeting where an application for Solar Panels to the Village of Irvington Architectural Board is asking to be heard.

Date of Meeting: 11/02/2022
Time of Meeting: Meeting starts at 8pm
Location of Meeting: Trustees Meeting Room
85 Main St. Irvington, NY 10533

Applicant Name	BRANDON HALL	Owners Name	ALAYNE KATZ
Applicant Mailing Address	64 MAIN ST Irvington, NY 10533	Owner Mailing Address	13 N COTTENET ST IRVINGTON NY 10533
Applicant Phone Number	914-591-0100	Owners Phone Number	914-841-4007
Applicant Email Address	eric@rivertownsolar.com	Owners Email Address	ALAYNE10533@GMAIL.COM

Address of Proposed Solar Panels:
Street Address 13 N COTTENET ST
IRVINGTON NY 10533

To Adjacent Neighbors of: LEOLA SPECHT
14 N COTTENET ST IRVINGTON NY 10533

Please take notice that the applicant named above is requesting the Board of Architectural Review of the Village of Irvington to grant a permit for the installation of **Solar Energy Equipment** to the address listed above.
Plans of the proposed work are available in the office of the Irvington Building Department for public inspection during regular business hours 5 days prior to the scheduled meeting.

9-12. Solar Energy Equipment.
For any application for a building permit for solar energy equipment, written notice of the application and the date, time and place of the meeting at which it will be considered must be given to all adjacent property owners not less than 10 days prior to the meeting date. Notice shall be by a method of mail or a delivery service company providing proof of mailing or delivery or by personal service of such notice on the property owners, evidenced by their signature as acknowledgment of receipt of such notice on a form supplied or similar to one supplied by the Village Clerk. Proof of service of the notice shall be filed prior to or at the meeting at which the application is considered.*
("Adjacent property" refers to any neighbor that shares a property line with the subject property as well as neighbors across any street from the subject property.)

NOTICE OF APPLICATION AND HEARING

Board of Architectural Review
Clerk's Office
Village of Irvington
Westchester County, New York

CERTIFIED MAIL

Date of Mailing 10/03/2022

NOTICE:
Pursuant to 9-12 of the code of the Village of Irvington notice to adjacent neighbors (as defined below) is required 10 days prior a meeting where an application for Solar Panels to the Village of Irvington Architectural Board is asking to be heard.

Date of Meeting: 11/02/2022
Time of Meeting: Meeting starts at 8pm
Location of Meeting: Trustees Meeting Room
85 Main St. Irvington, NY 10533

Applicant Name	BRANDON HALL	Owners Name	ALAYNE KATZ
Applicant Mailing Address	64 MAIN ST Irvington, NY 10533	Owner Mailing Address	13 N COTTENET ST IRVINGTON NY 10533
Applicant Phone Number	914-591-0100	Owners Phone Number	914-841-4007
Applicant Email Address	eric@rivertownsolar.com	Owners Email Address	ALAYNE10533@GMAIL.COM

Address of Proposed Solar Panels:
Street Address 13 N COTTENET ST
IRVINGTON NY 10533

To Adjacent Neighbors of: JULIAN R VINCENT
15 N DUTCHER ST IRVINGTON NY 10533

Please take notice that the applicant named above is requesting the Board of Architectural Review of the Village of Irvington to grant a permit for the installation of **Solar Energy Equipment** to the address listed above.
Plans of the proposed work are available in the office of the Irvington Building Department for public inspection during regular business hours 5 days prior to the scheduled meeting.

9-12. Solar Energy Equipment.
For any application for a building permit for solar energy equipment, written notice of the application and the date, time and place of the meeting at which it will be considered must be given to all adjacent property owners not less than 10 days prior to the meeting date. Notice shall be by a method of mail or a delivery service company providing proof of mailing or delivery or by personal service of such notice on the property owners, evidenced by their signature as acknowledgment of receipt of such notice on a form supplied or similar to one supplied by the Village Clerk. Proof of service of the notice shall be filed prior to or at the meeting at which the application is considered.*
("Adjacent property" refers to any neighbor that shares a property line with the subject property as well as neighbors across any street from the subject property.)

NOTICE OF APPLICATION AND HEARING

Board of Architectural Review
Clerk's Office
Village of Irvington
Westchester County, New York

CERTIFIED MAIL

Date of Mailing 10/03/2022

NOTICE:
Pursuant to 9-12 of the code of the Village of Irvington notice to adjacent neighbors (as defined below) is required 10 days prior a meeting where an application for Solar Panels to the Village of Irvington Architectural Board is asking to be heard.

Date of Meeting: 11/02/2022
Time of Meeting: Meeting starts at 8pm
Location of Meeting: Trustees Meeting Room
85 Main St. Irvington, NY 10533

Applicant Name	BRANDON HALL	Owners Name	ALAYNE KATZ
Applicant Mailing Address	64 MAIN ST Irvington, NY 10533	Owner Mailing Address	13 N COTTENET ST IRVINGTON NY 10533
Applicant Phone Number	914-591-0100	Owners Phone Number	914-841-4007
Applicant Email Address	eric@rivertownsolar.com	Owners Email Address	ALAYNE10533@GMAIL.COM

Address of Proposed Solar Panels:
Street Address 13 N COTTENET ST
IRVINGTON NY 10533

To Adjacent Neighbors of: 39 MAIN STREET REALTY
39 MAIN ST IRVINGTON NY 10533

Please take notice that the applicant named above is requesting the Board of Architectural Review of the Village of Irvington to grant a permit for the installation of **Solar Energy Equipment** to the address listed above.
Plans of the proposed work are available in the office of the Irvington Building Department for public inspection during regular business hours 5 days prior to the scheduled meeting.

9-12. Solar Energy Equipment.
For any application for a building permit for solar energy equipment, written notice of the application and the date, time and place of the meeting at which it will be considered must be given to all adjacent property owners not less than 10 days prior to the meeting date. Notice shall be by a method of mail or a delivery service company providing proof of mailing or delivery or by personal service of such notice on the property owners, evidenced by their signature as acknowledgment of receipt of such notice on a form supplied or similar to one supplied by the Village Clerk. Proof of service of the notice shall be filed prior to or at the meeting at which the application is considered.*
("Adjacent property" refers to any neighbor that shares a property line with the subject property as well as neighbors across any street from the subject property.)

NOTICE OF APPLICATION AND HEARING

Board of Architectural Review

Clerk's Office
Village of Irvington
Westchester County, New York

CERTIFIED MAIL

Date of Mailing 10/03/2022

NOTICE:
Pursuant to 9-12 of the code of the Village of Irvington notice to adjacent neighbors (as defined below) is required 10 days prior a meeting where an application for Solar Panels to the Village of Irvington Architectural Board is asking to be heard.

Date of Meeting: 11/02/2022
Time of Meeting: Meeting starts at 8pm
Location of Meeting: Trustees Meeting Room
85 Main St. Irvington, NY 10533

Applicant Name	BRANDON HALL	Owners Name	ALAYNE KATZ
Applicant Mailing Address	64 MAIN ST Irvington, NY 10533	Owner Mailing Address	13 N COTTENET ST IRVINGTON NY 10533
Applicant Phone Number	914-591-0100	Owners Phone Number	914-841-4007
Applicant Email Address	eric@rivertownsolar.com	Owners Email Address	ALAYNE10533@GMAIL.COM

Address of Proposed Solar Panels:
Street Address 13 N COTTENET ST
IRVINGTON NY 10533

To Adjacent Neighbors of: DANA BRENNEN
37 MAIN ST IRVINGTON NY 10533

Please take notice that the applicant named above is requesting the Board of Architectural Review of the Village of Irvington to grant a permit for the installation of **Solar Energy Equipment** to the address listed above.
Plans of the proposed work are available in the office of the Irvington Building Department for public inspection during regular business hours 5 days prior to the scheduled meeting.

9-12. Solar Energy Equipment.
For any application for a building permit for solar energy equipment, written notice of the application and the date, time and place of the meeting at which it will be considered must be given to all adjacent property owners not less than 10 days prior to the meeting date. Notice shall be by a method of mail or a delivery service company providing proof of mailing or delivery or by personal service of such notice on the property owners, evidenced by their signature as acknowledgment of receipt of such notice on a form supplied or similar to one supplied by the Village Clerk. Proof of service of the notice shall be filed prior to or at the meeting at which the application is considered.*
("Adjacent property" refers to any neighbor that shares a property line with the subject property as well as neighbors across any street from the subject property.)

7021 2720 0001 8232 3747

U.S. Postal Service™
CERTIFIED MAIL® RECEIPT
Domestic Mail Only

For delivery information, visit our website at www.usps.com®.

Irvington, NY 10533 OFFICIAL USE

Certified Mail Fee $4.00
Extra Services & Fees (check box, add fee as appropriate) $0.00
- Return Receipt (hardcopy) $ $0.00
- Return Receipt (electronic) $ $0.00
- Certified Mail Restricted Delivery $ $0.00
- Adult Signature Required $ $0.00
- Adult Signature Restricted Delivery $

Postage $0.60
Total Postage and Fees $4.60

0049 18
Postmark Here
IRVINGTON POST OFFICE
10/03/2022

Sent To Dana Brenner
Street and Apt. No., or PO Box No. 39 Main St
City, State, ZIP+4® Irvington NY 10533

PS Form 3800, April 2015 PSN 7530-02-000-9047 See Reverse for Instructions

7021 2720 0001 8232 3815

U.S. Postal Service™
CERTIFIED MAIL® RECEIPT
Domestic Mail Only

For delivery information, visit our website at www.usps.com®.

Irvington, NY 10533 OFFICIAL USE

Certified Mail Fee $4.00
Extra Services & Fees (check box, add fee as appropriate) $0.00
- Return Receipt (hardcopy) $ $0.00
- Return Receipt (electronic) $ $0.00
- Certified Mail Restricted Delivery $ $0.00
- Adult Signature Required $ $0.00
- Adult Signature Restricted Delivery $

Postage $0.60
Total Postage and Fees $4.60

0049 18
Postmark Here
10/03/2022

Sent To 150 East 94 LLC
Street and Apt. No., or PO Box No. 35 Main St
City, State, ZIP+4® Irvington NY 10533

PS Form 3800, April 2015 PSN 7530-02-000-9047 See Reverse for Instructions

7021 2720 0001 8232 3761

U.S. Postal Service™
CERTIFIED MAIL® RECEIPT
Domestic Mail Only

For delivery information, visit our website at www.usps.com®.

Irvington, NY 10533 OFFICIAL USE

Certified Mail Fee $4.00
Extra Services & Fees (check box, add fee as appropriate) $0.00
- Return Receipt (hardcopy) $ $0.00
- Return Receipt (electronic) $ $0.00
- Certified Mail Restricted Delivery $ $0.00
- Adult Signature Required $ $0.00
- Adult Signature Restricted Delivery $

Postage $0.60
Total Postage and Fees $4.60

0049 18
Postmark Here
IRVINGTON NY 10533
10/03/2022

Sent To Julian Vincent
Street and Apt. No., or PO Box No. 15 N Buttner St
City, State, ZIP+4® Irvington NY 10533

PS Form 3800, April 2015 PSN 7530-02-000-9047 See Reverse for Instructions

7021 2720 0001 8232 3754

U.S. Postal Service™
CERTIFIED MAIL® RECEIPT
Domestic Mail Only

For delivery information, visit our website at www.usps.com®.

Irvington, NY 10533 OFFICIAL USE

Certified Mail Fee $4.00
Extra Services & Fees (check box, add fee as appropriate) $0.00
- Return Receipt (hardcopy) $ $0.00
- Return Receipt (electronic) $ $0.00
- Certified Mail Restricted Delivery $ $0.00
- Adult Signature Required $ $0.00
- Adult Signature Restricted Delivery $

Postage $0.60
Total Postage and Fees $4.60

0049 18
Postmark Here
IRVINGTON NY 10533
10/03/2022

Sent To 39 Main St Realty
Street and Apt. No., or PO Box No. 39 Main St
City, State, ZIP+4® Irvington NY 10533

PS Form 3800, April 2015 PSN 7530-02-000-9047 See Reverse for Instructions

7021 2720 0001 8232 3785

U.S. Postal Service™
CERTIFIED MAIL® RECEIPT
Domestic Mail Only

For delivery information, visit our website at www.usps.com®.

Irvington, NY 10533 OFFICIAL USE

Certified Mail Fee $4.00
Extra Services & Fees (check box, add fee as appropriate) $0.00
- Return Receipt (hardcopy) $ $0.00
- Return Receipt (electronic) $ $0.00
- Certified Mail Restricted Delivery $ $0.00
- Adult Signature Required $ $0.00
- Adult Signature Restricted Delivery $

Postage $0.60
Total Postage and Fees $4.60

0049 18
Postmark Here
IRVINGTON POST OFFICE
10/03/2022

Sent To Samantha Kent
Street and Apt. No., or PO Box No. 15 N Cottenet St
City, State, ZIP+4® Irvington NY 10533

PS Form 3800, April 2015 PSN 7530-02-000-9047 See Reverse for Instructions

7021 2720 0001 8232 3778

U.S. Postal Service™
CERTIFIED MAIL® RECEIPT
Domestic Mail Only

For delivery information, visit our website at www.usps.com®.

Irvington, NY 10533 OFFICIAL USE

Certified Mail Fee $4.00
Extra Services & Fees (check box, add fee as appropriate) $0.00
- Return Receipt (hardcopy) $ $0.00
- Return Receipt (electronic) $ $0.00
- Certified Mail Restricted Delivery $ $0.00
- Adult Signature Required $ $0.00
- Adult Signature Restricted Delivery $

Postage $0.60
Total Postage and Fees $4.60

0049 18
Postmark Here
IRVINGTON POST OFFICE
10/03/2022

Sent To Leola Scott
Street and Apt. No., or PO Box No. 14 N Cottenet
City, State, ZIP+4® Irvington NY 10533

PS Form 3800, April 2015 PSN 7530-02-000-9047 See Reverse for Instructions

7021 2720 0001 8232 3792

U.S. Postal Service™
CERTIFIED MAIL® RECEIPT
Domestic Mail Only

For delivery information, visit our website at www.usps.com®.

Irvington, NY 10533 OFFICIAL USE

Certified Mail Fee $4.00
$ $0.00
Extra Services & Fees (check box, add fee as appropriate)
- ☐ Return Receipt (hardcopy) $ $0.00
- ☐ Return Receipt (electronic) $ $0.00
- ☐ Certified Mail Restricted Delivery $ $0.00
- ☐ Adult Signature Required $ $0.00
- ☐ Adult Signature Restricted Delivery $

Postage $0.60
$
Total Postage and Fees $4.60
$

0049 18
IRVINGTON POST OFFICE
Postmark Here
OCT 3 2022
IRVINGTON, NY 10/03/2022 10533

Sent To Estate Restorations
Street and Apt. No., or PO Box No. 11 N Dutcher St
City, State, ZIP+4® Irvington NY 10533

PS Form 3800, April 2015 PSN 7530-02-000-9047 See Reverse for Instructions

7021 2720 0001 8232 3808

U.S. Postal Service™
CERTIFIED MAIL® RECEIPT
Domestic Mail Only

For delivery information, visit our website at www.usps.com®.

Irvington, NY 10533 OFFICIAL USE

Certified Mail Fee $4.00
$ $0.00
Extra Services & Fees (check box, add fee as appropriate)
- ☐ Return Receipt (hardcopy) $ $0.00
- ☐ Return Receipt (electronic) $ $0.00
- ☐ Certified Mail Restricted Delivery $ $0.00
- ☐ Adult Signature Required $ $0.00
- ☐ Adult Signature Restricted Delivery $

Postage $0.60
$
Total Postage and Fees $4.60
$

0049 18
IRVINGTON POST OFFICE
Postmark Here
OCT 3 2022
IRVINGTON, NY 10/03/2022 10533

Sent To Vingsan Limited Partnership
Street and Apt. No., or PO Box No. 45 Main St
City, State, ZIP+4® Irvington NY 10533

PS Form 3800, April 2015 PSN 7530-02-000-9047 See Reverse for Instructions

PHOTOVOLTAIC DC DISCONNECT

WARNING! ELECTRIC SHOCK HAZARD!

Voc	V
Vmp	V
Isc	A
Imp	A

Label Location:
(DC), (INV)
Per Code:
CEC 690.53, NE

WARNING - Dual Power Sources

Second source is photovoltaic system

Label Location:
(INV), (AC), (LC

WARNING - Electric Shock Hazard

No user serviceable parts inside
Contact authorized servicer for assistance

Label Location:
(CB)

PHOTOVOLTAIC POINT OF INTERCONNECTION

WARNING! ELECTRIC SHOCK HAZARD!

DO NOT TOUCH TERMINALS. TERMINALS ON BOTH THE LINE AND LOAD SIDE MAY BE ENERGIZED

PV POWER SOURCE	
MAXIMUM AC CIRCUIT OUTPUT OPERATING CURRENT	A
OPERATING AC VOLTAGE	V

Label Location:
(POI)

PV COMBINER BOX

WARNING:

ELECTRIC SHOCK HAZARD

Label Location:
(CB)

CAUTION: SOLAR CIRCUIT

Label Location:
(C)

Solar Disconnect

WARNING - Electric Shock Hazard
DO NOT TOUCH TERMINALS
Terminals on both line and Load sides may be energized in the Open Position

Label Location:
(AC), (LC)
Per Code:
CEC 690.17, NEC 690.14 (4)

DC DISCONNECT

WARNING - Electric Shock Hazard
DO NOT TOUCH TERMINALS
Terminals on both line and Load sides may be energized in the Open Position

DC VOLTAGE IS ALWAYS PRESENT WHEN SOLARMODULES ARE EXPOSED TO SUNLIGHT

Label Location:
(DC), (INV)

WARNING!

INVERTER OUTPUT CONNECTION. DO NOT RELOCATE THIS OVERCURRENT DEVICE.

Label Location:
(POI)

PHOTOVOLTAIC AC DISCONNECT

WARNING! ELECTRIC SHOCK HAZARD!

OPERATING AC VOLTAGE	V
MAXIMUM OPERATING CURRENT	A

Label Location:
(AC), (D), (LC)
Per Code:
CEC 690.8.A.3 & CEC 690.54, NEC 690.14 (c)(2)

(AC): AC Disconnect
(C): Conduit
(CB): Combiner Box
(D): Distribution Panel
(DC): DC Disconnect
(IC): Interior Run Conduit
(INV): Inverter With Integrated DC Disconnect
(LC): Load Center

Single Ridge Roof with Two Pathways on Same Slope as Array

Two pathways are required for single ridge roofs. If both pathways are located on the same slope as the PV array, array space is limited. Exceptions to Section R324.7.4 may permit alternate access, pathways and venting locations.

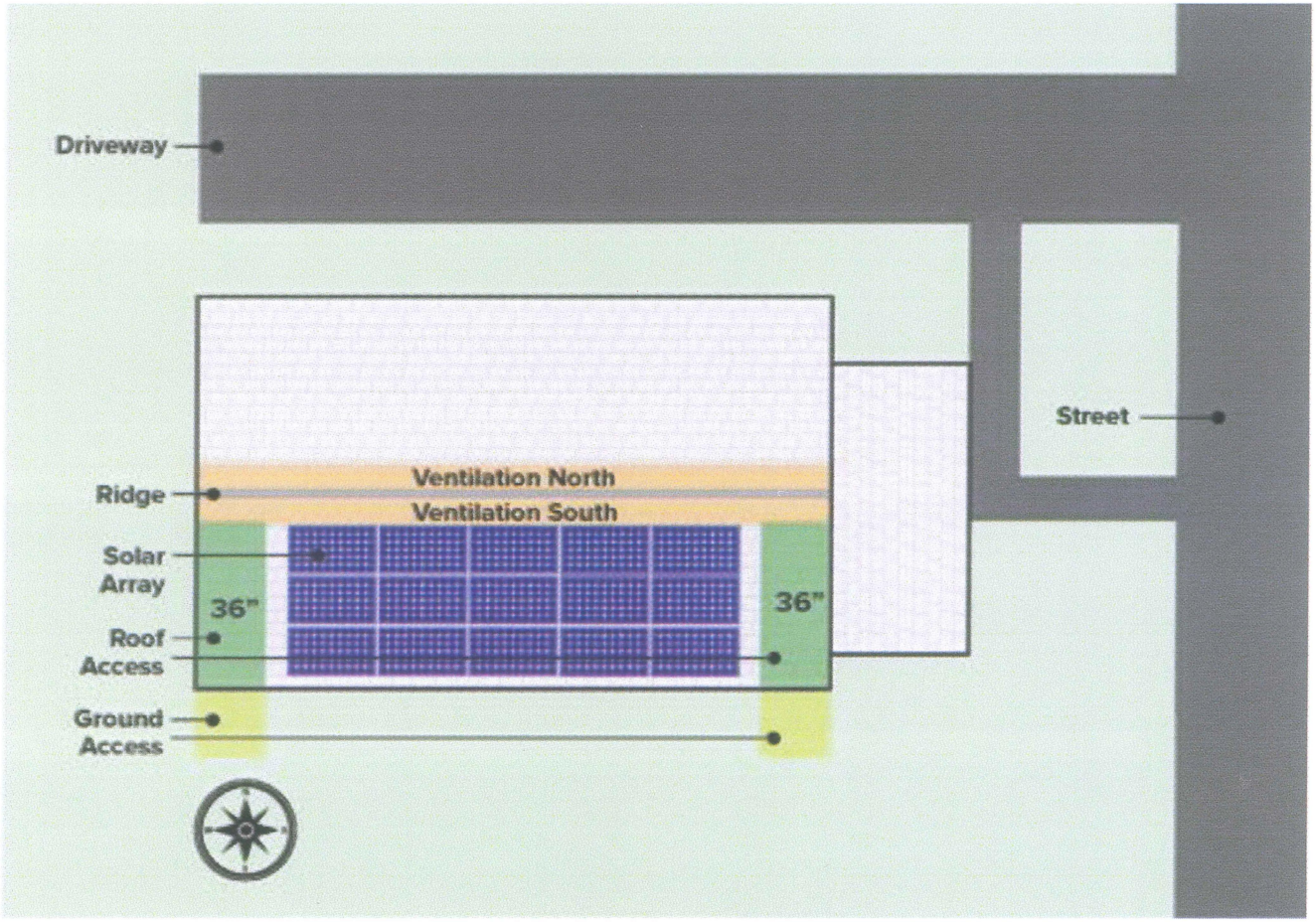

Source: NYSERDA

Single Ridge Roof with Alternate Access and Venting Locations

Alternate access, pathways and venting locations may be possible for single ridge roofs meeting exceptions to Section R324.7.4.

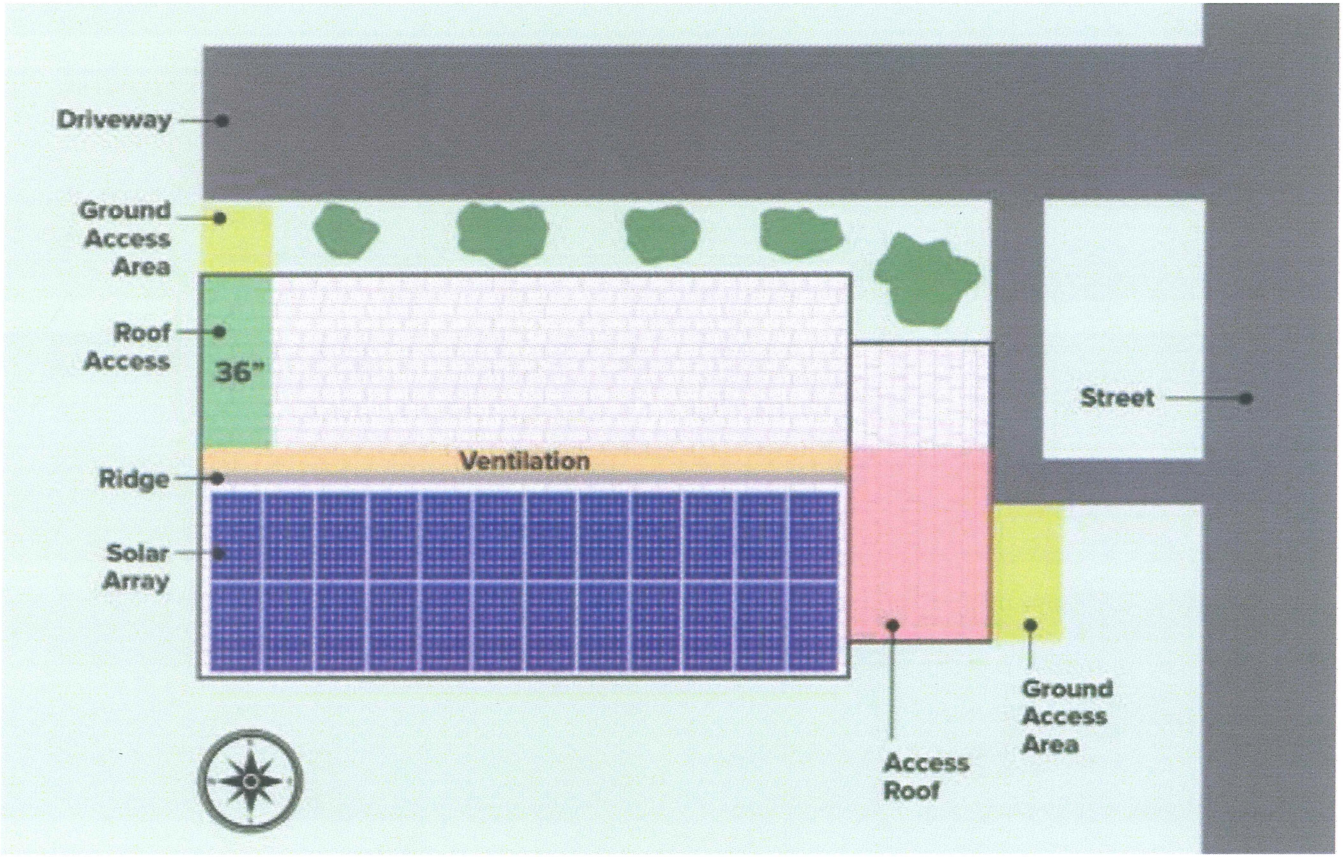

Source: NYSERDA

Hip Roof Installation with Alternate Venting and Pathway Locations

Alternate locations may be possible for venting and access pathways on hip roofs meeting exceptions to Section R324.7.5.

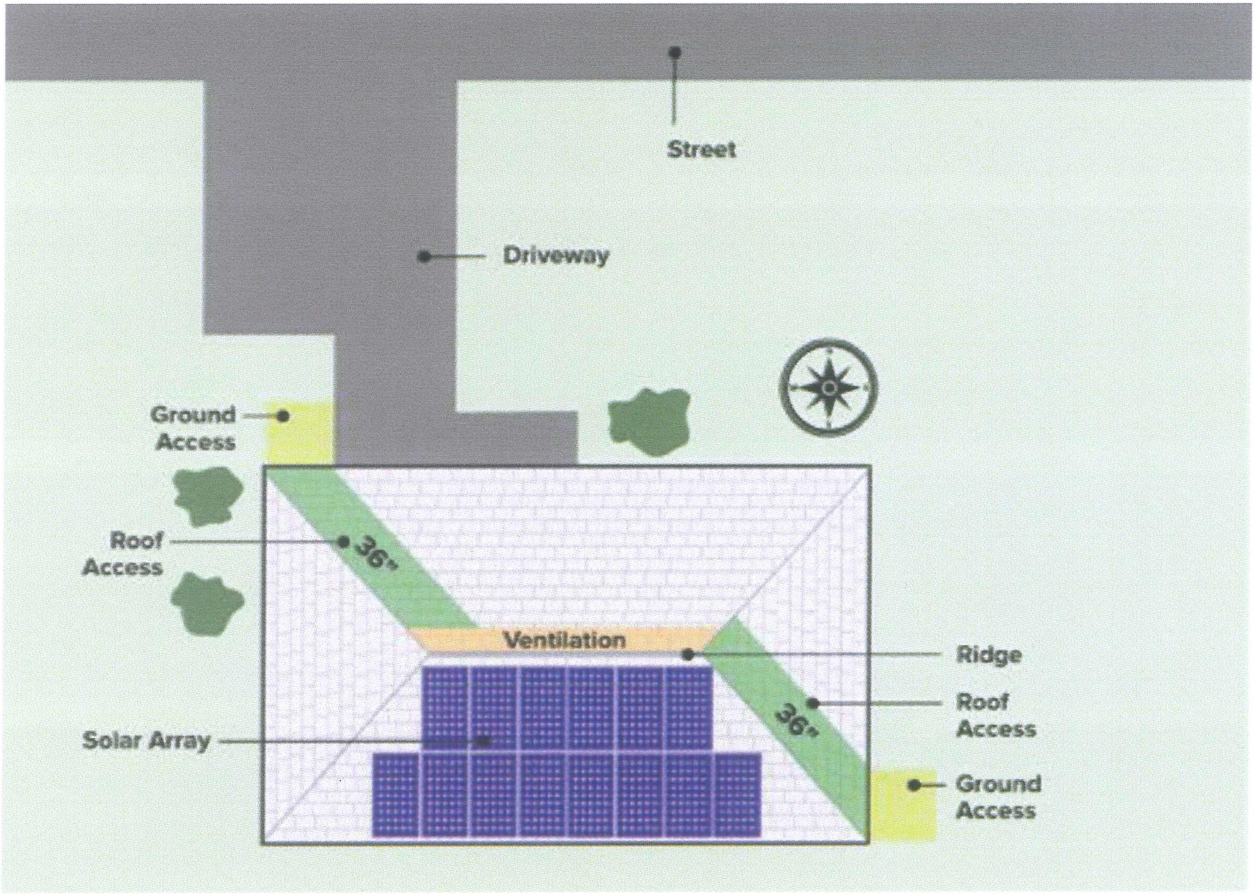

Source: NYSERDA

Hip Roof Installation Where an ACCESS ROOF Fronts a Street or Driveway

Section R324.7.5 Exception #2 generally applies to any residential structures where an ACCESS ROOF fronts a street, driveway, or other area readily accessible to emergency responders.

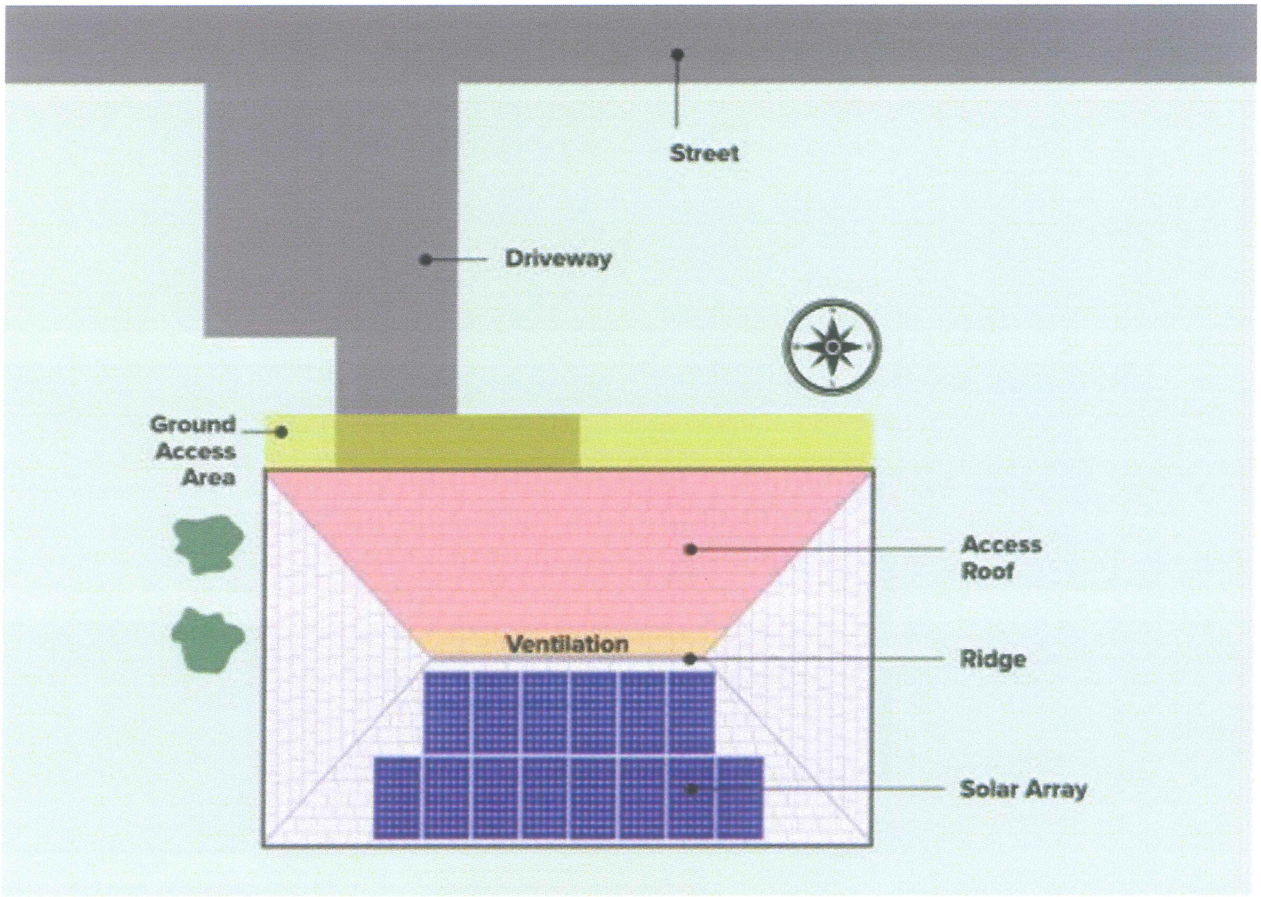

Source: NYSERDA

Roofs with Valleys

Section R324.7.6 requires any parts of PV arrays to be no closer than 18 inches from valleys.

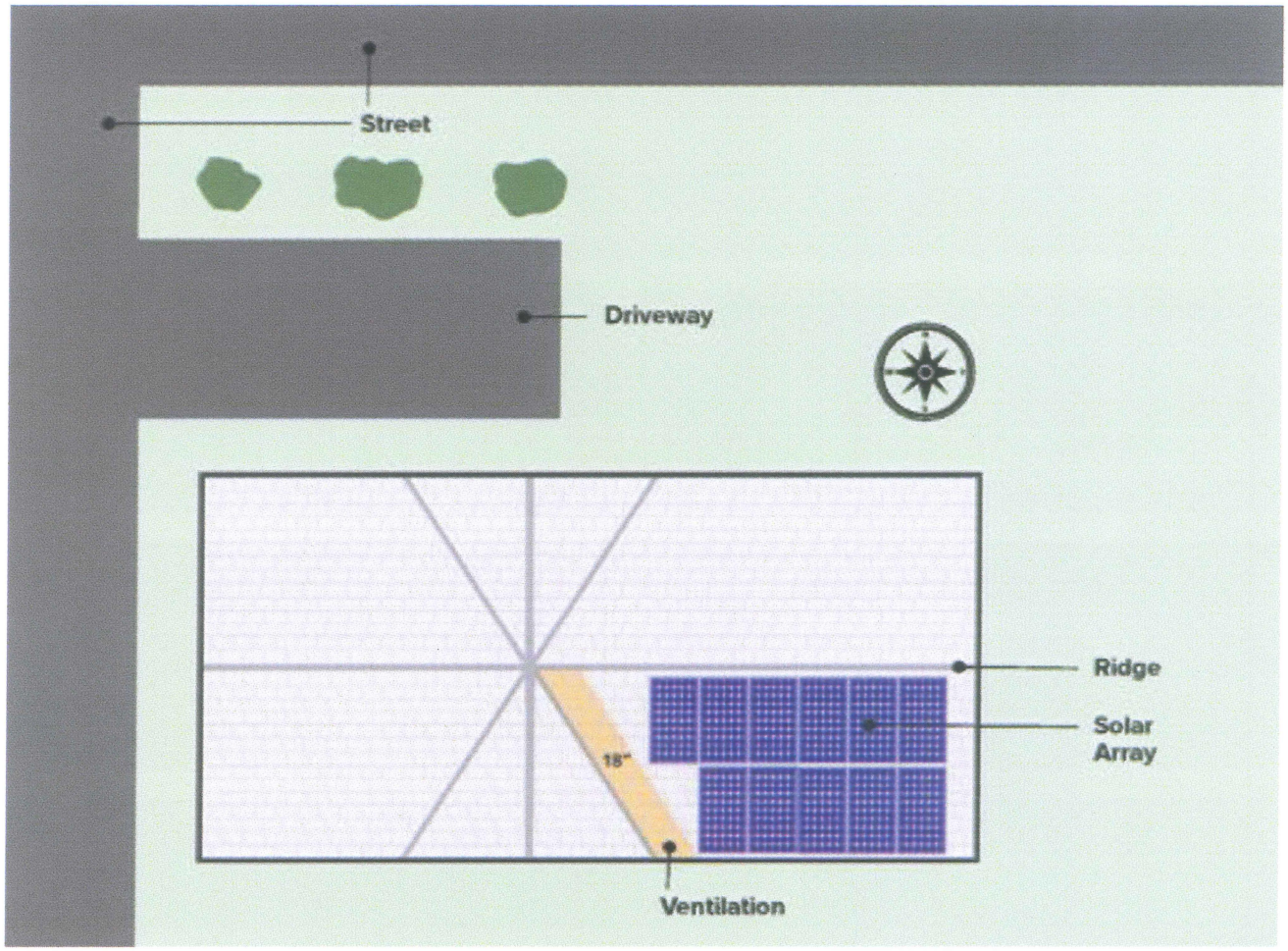

Source: NYSERDA

Chapter 9: Board of Architectural Review

[HISTORY: Adopted by the Board of Trustees of the Village of Irvington 11-19-1962. Amendments noted where applicable.]

GENERAL REFERENCES

Building construction — See Ch. **95**.

Zoning — See Ch. **224**.

Chapter 9: **Board of Architectural Review**
§ 9-1 **Purpose.**
§ 9-2 **Structural requirements.**
§ 9-3 **Board created; membership and terms of office.**
§ 9-4 **Meetings; powers.**
§ 9-5 **Site development plan applications.**
§ 9-6 **Building permit applications.**
§ 9-7 **Disapproval of application.**
§ 9-8 **Denial or issuance of building permit.**
§ 9-9 **Appeals.**
§ 9-10 **Conflicting laws suspended.**
§ 9-11 **Demolition of buildings in Historic Overlay District.**

§ 9-1 Purpose.

[Amended 10-18-1965 by L.L. No. 2-1965; 10-17-1983 by L.L. No. 1-1983; 2-1-2010 by L.L. No. 1-2010; 4-6-2015 by L.L. No. 4-2015]

The Village Board hereby finds that in order to protect the property, safety and health of the inhabitants of the Village of Irvington, it is desirable to establish a Board of Architectural Review to pass on the exterior appearance of all buildings and other structures to be constructed, reconstructed or altered. In addition, in order to protect the historic and architectural character of the Irvington Historic District, it is desirable to have the Board of Architectural Review pass on applications to demolish architecturally and historically significant buildings in the Historic Overlay District. In particular, the purposes of this chapter are to:

A. Improve the exterior appearance of buildings and other structures throughout the Village.

B. Continue the harmonious development of the Village.

C. Prevent the impairment of the property values of improved and unimproved property.

D. Protect the historic character of the Village, including, in particular, the Irvington Historic District, which as of January 2014, is listed on the National Register of Historic Places.

§ 9-2 Structural requirements.

[Added 10-18-1965 by L.L. No. 2-1965]

All residences to be constructed hereafter in the Village of Irvington shall conform to the following requirements:

A. Except for attached one-family dwellings, houses adjacent to each other in any direction shall not look alike. Minimum variety in appearance shall be achieved by changes in any two of the following factors when approved by the Board:

[Amended 10-19-2016 by L.L. No. 9-2016]

(1) Exterior materials.

(2) Fenestration, where changes are the result of omission, grouping or adding windows, including bay and full-height windows.

(3) Geometry of the structure where this is the result of plan changes, roof slope changes exceeding 15º, roof ridge direction changes or ridge height different by at least five feet; the addition or deletion of breezeways, porches and similar features, of at

least 200 square feet in floor area; or the provision of dormers or mansard or hip roof configurations.

B. In approved subdivisions when building permits are applied for, location of all houses on the lots adjacent to and opposite the one being applied for shall also be shown.

C. Where three or more houses front on a straight or slightly curved street or road, they shall not be similarly oriented with equal front yard dimensions. In such cases one of each of three houses shall be located with either an increased front yard of at least 10 feet or oriented differently by at least 30º.

§ 9-3 Board created; membership and terms of office.

There is hereby created a Board of Architectural Review which shall consist of five members, who shall serve without compensation. All members of the Board shall be residents of the Village of Irvington, and at least one member shall be a registered architect licensed by the State of New York. The members of the Board of Architectural Review shall be appointed by the Board of Trustees for a term of five years, and the Board of Trustees shall have authority to remove any member of such Board of Architectural Review for cause after public hearing. The Board of Trustees shall designate one member of the Board of Architectural Review to be Chairman, and the Board of Architectural Review shall designate one of the members as Acting Chairman and one as Secretary. The respective terms of the members first appointed shall be one, two, three, four and five years from and after their appointments. The term of all appointments shall expire at 12:00 noon on the first Monday of April. Vacancies shall be filled for the unexpired term of the members whose place has become vacant. The Village Clerk or Deputy Clerk shall act as the Clerk of the Board.

§ 9-4 Meetings; powers.

[Amended 9-18-1967 by L.L. No. 1-1967]

Meetings of the Board of Architectural Review shall be held on the second and fourth Monday each month and at such other times as the Board shall determine. The Chairman, or in his absence the Acting Chairman, may administer oaths and compel the attendance of witnesses. A majority of said Board shall constitute a quorum for the transaction of business. The Board shall keep minutes of its proceedings showing the vote of each member upon each question, or if absent or failing to vote, indicating such fact, and shall also keep copies of the examinations and other official actions. The Board shall have power from time to time to adopt, amend and repeal rules and regulations, not inconsistent with law or the provisions of this chapter, governing its procedure and the transaction of its business and for the purpose of carrying into effect the standards outlined in § **9-6** hereof.

§ 9-5 Site development plan applications.

[Added 2-1-2010 by L.L. No. 1-2010[1]

Every application for site development plan approval for the construction, reconstruction or alteration of any building or structure shall be referred to the Board of Architectural Review for its recommendation and report to the Planning Board. This referral shall be in addition to the referral required by § **9-6**.

§ 9-6 Building permit applications.

[Amended 9-18-1967 by L.L. No. 1-1967; 10-17-1983 by L.L. No. 1-1983; 4-15-2003 by L.L. No. 5-2003]

Every application for a building permit for the construction, reconstruction or alteration of a one- or two-family dwelling or any other structure in excess of 2,000 cubic feet of cubical content, proposed for construction within a residence district or identified on the Building Zone Map,[1] or for the construction, reconstruction or alteration of any structure in excess of 2,000 cubical contents proposed for construction within a business zone as identified on said map, or for a permit for the erection of signs, walls or fences, shall be filed with the Building Inspector at least 10 days prior to the next scheduled meeting of the Board of Architectural Review, and such application shall be approved or

disapproved by the Board of Architectural Review, provided that the Building Inspector has certified that the application is appropriate for review by the Board of Architectural Review.

§ 9-7Disapproval of application.

[Amended 2-1-2010 by L.L. No. 1-2010]

The Board of Architectural Review may disapprove any building permit referred to it, provided that such disapproval shall be by majority of all the members of the Board present at any meeting where said vote is taken, and provided that the Board finds that the construction, reconstruction or alteration for which the permit was applied would not be compatible with the purposes set forth in § **9-1** and thereby be detrimental to the desirability, property values or development of the surrounding area or not be in keeping with the harmonious development of the district in which the proposed structure is to be located. Any such finding shall not be based on personal preference by the members of the Board of Architectural Review as to taste or choice of architectural style, but shall be limited to the harmonious development of the district and the Village of Irvington.

§ 9-8Denial or issuance of building permit.

[Amended 9-18-1967 by L.L. No. 1-1967]

The Building Inspector shall refuse any building permit application disapproved as provided in § **9-6**. If the Board of Architectural Review shall approve or fail to act on any building permit application referred to it under § **9-5** within 15 days of the date of the first scheduled meeting following the filing of the application of a building permit in accordance with § **9-5** hereof, the Building Inspector shall forthwith issue the permit as applied for.

§ 9-9Appeals.

[Amended 8-15-2016 by L.L. No. 7-2016]

A. Findings of fact. Any person aggrieved by the action of the Board of Architectural Review (ARB) in disapproving a building permit application may request the ARB to make formal findings of fact. Such request shall be filed in the office of the Village Clerk within 20 days after the date of such disapproval. If such a request is made, the ARB shall make findings of fact within 30 days after the request is filed, file them in the office of the Village Clerk, and send a copy of them to the requesting person.

B. Appeal to Zoning Board of Appeals. Within 20 days after the findings of fact are filed, the aggrieved person may take an appeal from the ARB's disapproval to the duly constituted Board of Zoning Appeals of the Village of Irvington in the same manner as is provided for zoning appeals. The standard of review shall be whether the decision of the Board of Architectural Review was arbitrary, capricious or unsupported by substantial evidence of record. The Board of Zoning Appeals may reverse or affirm the action of the Board of Architectural Review.

C. Remand to ARB. If the Board of Zoning Appeals reverses the action of the Board of Architectural Review, it shall remand the application to the Board of Architectural Review for approval and the imposition of reasonable conditions, or other further action, consistent with the decision of the Zoning Board of Appeals. Any such subsequent decision of the ARB shall be appealable to the Zoning Board of Appeals.

§ 9-10 Conflicting laws suspended.

This chapter shall supersede such provisions of the Building Code of the Village of Irvington[1] and applicable provisions of the laws of the State of New York to the extent that they conflict with or are contrary to the provisions of this chapter.

§ 9-11Demolition of buildings in Historic Overlay District.

[Added 4-6-2015 by L.L. No. 4-2015]

A. Approval required. Every application to demolish (Note: The term "demolish" is defined in the Zoning Code at § **224-197**.) a contributing building (Note: "Contributing buildings" in the Historic Overlay District are those identified in Appendix A to the Irvington Zoning Code.) in the Historic

Overlay District shall be referred by the Building Inspector to the Board of Architectural Review (ARB) for its approval or disapproval.

B. Application. An applicant seeking to demolish such building shall provide the following information:

(1) Legal description, property address and age of building.

(2) Names, addresses, e-mail addresses, telephone numbers, and signatures of the applicant and the building owner.

(3) Detailed explanation of the reason demolition is requested.

(4) All appraisals obtained within the last two years by the owner or applicant in connection with the purchase, financing or ownership of the property, if any exist.

(5) Date the property was purchased and purchase price.

(6) Any listing of the property for sale or rent, price asked, and offers received, if any, within the previous two years, including testimony and relevant documents regarding:

(a) Any real estate broker or firm engaged to sell or lease the property;

(b) Reasonableness of the price or rent sought by the applicant; or

(c) Any advertisements placed for the sale or rent of the property.

(7) If the reason for demolition relates to the safety of the building, a report from a licensed engineer or architect with experience in rehabilitation as to the structural soundness of the building and its suitability for rehabilitation.

(8) If the reason for demolition relates to the safety of building, written detailed cost estimates to restore or repair the structure.

(9) Economic incentives and/or funding available to the applicant through federal, state, local government or private programs.

(10) Description of the proposed replacement project in sufficient detail to permit the ARB to visualize the proposed replacement.

(11) Such other information as the ARB finds necessary to make its determination.

C. Public hearing.

(1) The ARB shall hold a public hearing on the application for demolition.

(2) Notice of such hearing shall be given by publication in the official newspaper(s) of the Village at least 10 days before the date of the hearing.

(3) In addition, the applicant shall erect a sign facing each public street on which the property abuts, giving notice that an application for demolition has been made. The sign, on a placard to be provided by the Village, shall be posted not less than 15 days immediately preceding the hearing date and shall be displayed continuously until the application is decided. The sign shall be placed to assure visibility from the street. Prior to the public hearing, the applicant shall provide proof that the sign was posted as required by this subsection. The applicant shall remove the sign the day after the application is decided.

(4) A written record shall be made of the public hearing and the ARB's deliberations on the application.

(5) During the public hearing, the ARB may solicit expert testimony or opinion by an architect, real estate consultant, and/or other professional experienced in historic properties and rehabilitation, on any question relevant to its determination.

D. Criteria for approval. The Board of Architectural Review shall not approve the application for demolition unless the applicant establishes all of the following:

(1) For buildings sought to be demolished for safety reasons:

(a) The building represents a hazard to the safety of the public or the applicant or owner.

(b) The safety hazard cannot be corrected within economic means reasonably available to the applicant or owner.

(c) Good faith efforts to find a purchaser interested in acquiring the property and preserving it have failed.

(2) For buildings sought to be demolished for reasons other than safety:

(a) The property is incapable of earning a reasonable return on investment, regardless of whether that return represents the most profitable return possible.

(b) The property cannot be adapted for any other use, whether by the current owner or by a purchaser, that would result in a reasonable return.

(c) Good faith efforts to find a purchaser interested in acquiring the property and preserving it have failed.

(3) In deciding the application for demolition, the ARB may consider whether the owner has created his/her own hardship through waste and neglect, thereby permitting the property to fall into a serious state of disrepair.

(4) In determining whether to approve or disapprove an application for a demolition permit, the ARB shall consider only the exterior features of the building and shall have no jurisdiction to consider changes to interior walls or spaces that do not affect the exterior appearance of the building.

E. Replacement plan. The ARB may not approve demolition until a proposal to replace the building to be demolished receives all required approvals from the Planning Board and ARB. In the event that the applicant intends to maintain the site of the demolished building as open space, the ARB must approve a landscape plan.

F. Decision. The ARB may approve or disapprove the application for demolition. Its decision must be in writing and must state the reasons for approval or disapproval. The written decision must be provided promptly to the applicant and to the Building Inspector.

G. Appeals. Any person aggrieved by the ARB's disapproval of an application for demolition, within 30 days of delivery of the decision to the applicant, may appeal the decision to the Board of Trustees by serving a written notice on the Village Clerk. The Board of Trustees shall review the record made before the Board of Architectural Review and may reverse or affirm its decision or remand it to the ARB for further findings.

LOCALLAW#1 OF2017

AMENDING THE IRVINGTON CODE WITH RESPECT TO SOLAR ENERGY EQUIPMENT

Be it enacted by the Board of Trustees of the Village of Irvington as follows:

Section 1: Section 9-6 of the Code of the Village of Irvington (Board of Architectural Review; Building permit applications) is hereby amended to read as follows (deleted language stricken; new language in *italics):*

Every application for a building permit for the construction, reconstruction or alteration of a one- or two-family dwelling or any other structure in excess of 2,000 cubic feet of cubical content, proposed for construction \Vi.thin a residence district or identified on the Building Zone Map, or for the construction, reconstruction or alteration of any structure in excess of 2,000 cubical contents proposed for construction v:ithin a business zone as identified on said map, or for a permit for the erection of signs, *solar energy equipment,* walls or fences, shall be filed with the Building Inspector at least 10 days prior to the next scheduled meeting of the Board of Architectural Review, and such application shall be approved or disapproved by the Board of Architectural Review, provided that the Building Inspector has certified that the application is appropriate for review by the Board of Architectural Review.

Section 2: A new section is hereby added to Chapter 9 (Board of Architectural Review), to read as follows:

§ 9-12. Solar Energy Equipment.

A. For any application for a building permit for solar energy equipment, written notice of the application and the date, time and place of the meeting at which it will be considered must be given to all adjacent property* owners not less than 10 days prior to the meeting date. Notice shall be by a method of mail or a delivery service company providing proof of mailing or delivery or by personal service of such notice on the property owners, evidenced by their signature as acknowledgment of receipt of such notice on a form supplied or similar to one supplied by the Village Clerk. Proof of service of the notice shall be filed prior to or at the meeting at which the application is considered.

* "Adjacent property" refers to any neighbor that shares a property line with the subject property as well as neighbors across any street from the subject property.

B. In reviewing building permits for solar energy equipment, notwithstanding § 9-7, the Board of Architectural Review shall follow the Solar Energy Equipment Guidelines adopted by the Board of Trustees.

C. The homeowner must demonstrate to the Board of Architectural Review that all reasonable options have been considered to achieve compliance with the Solar Energy Equipment Guidelines.

Section 3: Section 224-3 of the Zoning Code (Definitions) is hereby am.ended by adding the following new definitions:

SOLAR ENERGY EQUIPMENT - Any cell, panel, or other device that converts, absorbs, or transforms solar energy, including equipment for photovoltaic and solar thermal systems, as well as any supply lines, return lines, control valves, wiring, meters, switches, modules, batteries, inverters or other devices and their cabinets associated with the installation or function of a solar energy system.

SOLAR ENERGY SYSTEM - A photovoltaic system, a solar thermal system or any other system by which solar energy is used to generate electricity or heat.

Section 4: Section 224-3 of the Zoning Code (Definitions) is hereby am.ended by adding the following paragraph to the examples in the definition of "BUILDING":

J. Solar energy equipment.

Section 5: Section 224-8.B of the Zoning Code (One-Family Residence Districts; Use regulations) is hereby amended by adding the following subsection to the list of permitted accessory uses:

(9) Solar energy equipment, provided it is used only to provide power for use by owners, lessees, tenants, residents or other occupants of the premises on which it is erected. Nothing contained in this provision shall be construed to prohibit the sale of excess power through a "net billing" or similar program in accordance with New York Public Service Law § 66-j or similar New York State or federal statute.

Section 6: Section 224-8.B(9) is hereby designated § 224-8.B(1 0).

Section 7: Subsection A of § 224-36 (Business District; Use regulations) is hereby amended by adding the following subsection to the list of permitted uses:

(17) Solar energy equipment, provided it is used only to provide power for use by owners, lessees, tenants, residents or other occupants of the premises on which it is erected. Nothing contained in this provision shall be construed to prohibit the sale of excess power through a "net billing" or similar program in accordance with New York Public Service Law § 66-j or similar New York State or federal statute.

Section 8: Section 224-46.B(l) (Railroad District; Use regulations) is hereby amended by adding the following subsection to the list of permitted uses:

(n) Solar energy equipment, provided it is used only to provide power for use by owners, lessees, tenants, residents or other occupants of the premises on which it is erected. Nothing contained in this provision shall be construed to prohibit the sale of excess power through a "net billing" or similar program in accordance with New York Public Service Law § 66-j or similar New York State or federal statute.

Section 9: Subsection C of § 224-47.2 (Recreation District; Use regulations) is hereby amended by adding the following subsection to the list of permitted accessory uses:

(6) Solar energy equipment, provided it is used only to provide power for use by owners, lessees, tenants, residents or other occupants of the premises on which it is erected. Nothing contained in this provision shall be construed to prohibit the sale of excess power through a "net billing" or similar program in accordance with New York Public Service Law § 66-j or similar New York State or federal statute.

Section 10: Section 114-1 (Schedule of Code fees and charges) is hereby amended by adding the new subsection to section number 95-13 (Building permit fees):

(4)	Applications for solar PV installations and replacements	$85 application fee, plus $200 for systems up to 5 kilowatts $450 for systems above 5 and less than 10 kilowatts $700 for systems above 10 and less than 20 kilowatts $700 + $250 for each

additional 10 kilowatts above 20 for systems above 20 kilowatts

$75 Certificate of Completion inspection

Section 11: All ordinances, local laws, and parts thereof inconsistent with this local law are hereby repealed.

Section 12: This local law shall take effect immediately upon filing in the office of the New York Secretary of State.

SOLAR ENERGY EQUIPMENT GUIDELINES
(February 6, 2017)

Statement of Purpose: Because it is in the public interest to provide for and encourage renewable energy systems and a sustainable quality of life, the purpose of these guidelines is to facilitate the development and operation of renewable energy systems based on slµl.light. These guidelines are intended to balance the desirability and demand for alterriative energy systems with maintaining the aesthetics of the Village, to minimize the potential for any negative impact by these systems, and to protect the health, safety and welfare of the residents of the Village. The Board of Architectural Review, pursuant to Village Code § 9-12, is to follow these guidelines in reviewing building permits for solar energy equipment.

Definitions: As used in these guidelines, the following terms shall have the meanings indicated:

FREESTANDING OR GROUND-MOUNTED - Directly installed in or on the ground and not attached or affixed to.an existing structure.

SOLAR ENERGY EQUIPMENT - Any cell, panel, or other device that converts, absorbs, or transforms solar energy, including equipment for photovoltaic and solar thermal systems, as well as any supply lines, return lines, control valves, wiring, meters, switches, modules, batteries, inverters or other devices and their cabinets associated with the installation or function of a solar energy system.

SOLAR ENERGY SYSTEM - A photovoltaic system, a solar thermal system or any other system by which solar energy is used to generate electricity or heat.

Guidelines

1. All measures should be taken to avoid or mitigate any glare onto neighboring residential property or public rights-of-way.

2. To the greatest extent practicable, equipment shall be installed in a manner that minimizes its visibility from surrounding properties and public rights-of-way while maintaining viability and functional integrity.

3. To the greatest extent practicable, solar energy equipment shall use materials, colors and textures designed to blend with the structure to which it is affixed.

4. Solar energy equipment may be mounted on any section of the roof of a building provided it meets these guidelines and complies with the following requirements:

   (a) On a pitched roof facing a street or public way, the equipment must be mounted flush, with the plane of the system parallel with the roof surface, and shall be

mounted as close to the roof surface as possible, but in no event may it be mounted more than 6 inches above the roof surface.

(b) On a pitched roof the highest point of the equipment at full extension shall not extend beyond the highest point of the roof to which it is attached and must be set back in accordance with the current Uniform Fire and Building Code.

(c) On a flat roof, the equipment shall not extend above any cornice or parapet. Where there is no cornice or parapet, the equipment shall be set back from the roof edges four feet for each foot of solar energy system height.

(d) Solar collector units shall be consolidated to one area on the roof to the greatest extent possible, and shall not be scattered in multiple groups on the roof.

(e) The equipment shall be installed so as to appear regular in shape and arranged in a pattern that conforms with the general shape and configuration of the roof upon which it is mounted. When the arrangement of equipment is broken up by a building feature, the equipment shall be arranged symmetrically.

(±) The equipment and its installation shall not damage or obscure character-defining features, such as dormers, cornices, chimneys or roofline.

5. To the maximum extent possible, all solar energy equipment other than the collectors shall be located within the house or on the side or rear of the building.

6. Free standing and ground-mounted solar energy equipment shall comply with the following requirements:

(a) It shall be located in a side or rear yard only and shall comply with all setback requirements for a principal building.

(b) At full extension, it shall not exceed 6 *Vi* feet in height above the ground, as measured to the highest point on the equipment. If the ground level is raised or built up for the installation, this height will be measured from the preexisting ground level.

(c) It shall be fully screened from adjacent properties by fencing, a combination of evergreen and deciduous plantings which shall not be less than 6 *Yi* feet in height when installed, or, when possible and practicable, through the use of architectural features or screening that will harmonize with the character of the property and surrounding area.

(d) All exterior electrical lines must be buried below the surface of the ground where possible or be placed in a conduit.

LOCAL LAW #4 OF 2017

AMENDING THE IRVINGTON CODE WITH RESPECT TO SOLAR ENERGY EQUIPMENT AND SHARED SOLAR PROJECTS

Be it enacted by the Board of Trustees of the Village of Irvington as follows:

Section 1: Subsection A(17) of § 224-36 (Business District; Use regulations) is hereby amended to read as follows (new language in *italics*):

(17) Solar energy equipment, provided it is used only to provide power for use by owners, lessees, tenants, residents or other occupants of the premises on which it is erected. Nothing contained in this provision shall be construed to prohibit*: (a)* the sale of excess power through a "net billing" or similar program in accordance with New York Public Service Law § 66-j or similar New York State or federal statute*, or (b) a Community Distributed Generated (also called "Shared Solar") project approved by the New York State Energy Research and Development Authority (NYSERDA)* .

Section 2: Subsection B(1)(n) of § 224-46 (Railroad District; Use regulations) is hereby amended to read as follows (new language in *italics*):

(n) Solar energy equipment, provided it is used only to provide power for use by owners, lessees, tenants, residents or other occupants of the premises on which it is erected. Nothing contained in this provision shall be construed to prohibit*: (i)* the sale of excess power through a "net billing" or similar program in accordance with New York Public Service Law § 66-j or similar New York State or federal statute*, or (b) a Community Distributed Generated (also called "Shared Solar") project approved by the New York State Energy Research and Development Authority (NYSERDA)*.

Section 3: All ordinances, local laws, and parts thereof inconsistent with this local law are hereby repealed.

Section 4: This local law shall take effect immediately upon filing in the office of the New York Secretary of State.

Utility disconnect
Combiner Box